PRESCIENT^{III}

FIRE ALARM & GAS EXTINGUISHING CONTROL PANEL

APPLICATION, INSTALLATION, OPERATION & MAINTENANCE MANUAL

CONTENTS

1. INTRODUCTION 4
2. GENERAL DESCRIPTION 4
3. FUNCTIONAL DESCRIPTION 9
3.1. DETECTION ZONES (ZONE 1, ZONE 2 & AUX ZONE) 9
3.2. MANUAL RELEASE FACILITY (MR & PANEL MOUNTED CALL POINT) 9
3.3. GENERAL ALARM CIRCUITS (SNDR1 & SNDR2) 9
3.4. EXTINGUISHING ALARM CIRCUIT (EXT SNDR) 9
3.5. ACTUATOR CIRCUITS (ACT1 & ACT2) 9
3.6. REPEATER OUTPUTS (Z1, Z2, AUX, MR, OUTPUTS 1, 2, 3, 4, 5) 10
3.7. AUXILIARY 24VDC SUPPLY 10
3.8. STATUS LAMP UNIT 10
3.9. REMOTE INPUTS 10
3.9.1. REMOTE CONTROLS 10
3.9.2. GAS TRAPPED 10
3.9.3. AUTO/MANUAL LOCK-OFF SWITCH (AUTO/MANUAL) 10
3.9.4. LOW PRESSURE FAULT (GAS LOW) 10
3.9.5. EXTINGUISHING ISOLATION VALVE STATUS (ISO. VALVE) 11
3.9.6. GAS RELEASED PRESSURE SWITCH (GAS REL.) 11
3.9.7. EMERGENCY HOLD (HOLD) 11
3.9.8. EMERGENCY ABORT INPUT (ABORT) 11
3.10. RELAY CONTACTS 11
3.10.1. FIRST STAGE SHUTDOWN (1ST STAGE) 12
3.10.2. SECOND STAGE SHUTDOWN (2ND STAGE) 12
3.10.3. THIRD STAGE SHUTDOWN (3RD STAGE) 12
3.10.4. GAS DISCHARGED (GAS REL SIG) 12
3.10.5. FIRE SIGNAL (FIRE SIG) 12
3.10.6. FAULT SIGNAL (FAULT SIG) 12
3.10.7. AUXILIARY RESET (RESET) 12
3.11. INTERNAL STANDBY BATTERIES 12
3.12. FUNCTION ENABLE/DISABLE SWITCHES 13
3.12.1. FUNCTION SELECT SWITCH 13
3.12.2. LINK FOR EARTH FAULT MONITORING 14
3.13. FAULT LEDS 15
3.14. INTERNAL BUZZER 15
3.15. DISPLAY BOARD – GENERAL 15
3.16. DISPLAY BOARD – FIRE STATUS INDICATIONS 16
3.16.1. FIRE 16
3.16.2. FIRE SIGNAL 16
3.16.3. ZONE 1 16
3.16.4. ZONE 2 16
3.16.5. AUX ZONE 16
3.16.6. REMOTE SOUND ALARMS 16
3.16.7. FIRE SOUNDER FAULT/DISABLED 16
3.17. DISPLAY BOARD – COMMON STATUS INDICATIONS 17
3.17.1. POWER SUPPLY ON 17
3.17.2. GENERAL FAULT 17
3.17.3. POWER SUPPLY FAULT 17
3.17.4. SYSTEM FAULT 17
3.17.5. EARTH FAULT 17
3.17.6. FUSE FAILED 17
3.17.7. FAULT SIGNAL FAULT/DISABLED 17
3.17.8. SOUNDER TEST 17
3.18. DISPLAY BOARD – EXTINGUISHING STATUS INDICATIONS 17
3.18.1. AUTO & MANUAL 17
3.18.2. MANUAL ONLY 17
3.18.3. MANUAL RELEASE ACTIVE 17
3.18.4. SYSTEM ACTIVATED 17
3.18.5. GAS RELEASED 17
3.18.6. GAS RELEASED SIGNAL ACTIVE 17
3.18.7. EMERGENCY ABORT ACTIVE 17
3.18.8. EMERGENCY HOLD ACTIVE 17
3.18.9. CIRCUIT FAULT 17
3.18.10. GAS LOW 18
3.18.11. GAS TRAPPED IN MANIFOLD 18
3.18.12. ISOLATION VALVE ABNORMAL 18
3.18.13. ISOLATION VALVE CLOSED 18
3.18.14. MANUAL RELEASE FAULT/DISABLED 18
3.18.15. EXTINGUISHING DISABLED 18
3.18.16. GAS RELEASED SIGNAL DISABLED 18
3.18.17. SHUTDOWN OUTPUTS DISABLED 18
3.18.18. SECONDS TO DISCHARGE 18
3.19. DISPLAY BOARD - USER CONTROLS 18
3.19.1. SILENCE ALARMS 18
3.19.2. RESOUND ALARMS 18
3.19.3. FIRE RESET 18
3.19.4. EXTINGUISHING RESET 18
3.19.5. SILENCE BUZZER 18
3.19.6. AUTO & MANUAL / MANUAL ONLY 18
3.19.7. SELECT ON/OFF 18
3.19.8. ENABLE 18
3.19.9. DISABLE 19
3.19.10. TEST 19
3.19.11. SCROLL 19
4. PANEL OPERATION 19
4.1. CIRCUIT CONFIGURATION OPTIONS 19
4.2. CIRCUIT SELECT CURSOR 19
4.2.1. DISABLE, RE-ENABLE, TEST 19
4.2.2. CONFIGURE I.S. ZONES 20
4.2.3. CONFIGURE SLU (STATUS LAMP UNITS) 20
4.3. PANEL QUIESCENT STATE 20
4.4. AUXILIARY FIRE CONDITION 21
4.5. SINGLE EXTINGUISHING ZONE FIRE CONDITION 21
4.5.1. MANUAL ONLY MODE 21
4.5.2. AUTOMATIC & MANUAL MODE 21
4.6. TWO EXTINGUISHING ZONES FIRE CONDITION 21
4.6.1. MANUAL ONLY MODE 21
4.6.2. AUTOMATIC & MANUAL MODE 21
4.7. MANUAL RELEASE CONDITION 21
4.8. ACTIVATED CONDITION 22
4.8.1. EMERGENCY HOLD OPERATION 22
4.8.2. EMERGENCY ABORT OPERATION 22
5. TECHNICAL SPECIFICATION 22
6. STANDBY BATTERY REQUIREMENTS 23
6.1. BATTERY CAPACITY CALCULATION 23
6.2. BATTERY REPLACEMENT 23
6.3. BATTERY CHARGING 23
7. DETECTOR COMPATIBILITY 25
8. PANEL INSTALLATION 30
8.1. IMPORTANT SAFETY CONSIDERATIONS FOR BATTERIES 30
8.2. ELECTRICAL SAFETY 30

8.3. CABLE RECOMMENDATIONS: 31
8.4. INSTALLATION PROCEDURE 32
8.5. COMMISSIONING PROCEDURE 33
9. SYSTEM MAINTENANCE 36
9.1. OVERVIEW..... 36
9.2. WEEKLY TEST ROUTINE..... 36
9.3. BATTERY REPLACEMENT 36
10. PCB LAYOUT DIAGRAM..... 37
11. PANEL EXPLODED VIEW 38
12. CONNECTION DIAGRAMS 39
12.1. ZONE CIRCUIT CONNECTION DIAGRAM..... 39
12.2. SOUNDERS & ACTUATORS CONNECTION DIAGRAM 40
12.3. MONITORED INPUTS CONNECTION DIAGRAM 41
12.4. MONITORED OUTPUTS CONNECTION DIAGRAM 42
12.5. REMOTE OUTPUTS & SLU COMMUNICATION CONNECTION DIAGRAM 43
12.6. GLOSSARY 43
13. MECHANICAL, ELECTRICAL & ENVIRONMENTAL SPECIFICATION 44
14. CONSTRUCTION PRODUCTS DIRECTIVE 45

Figures

FIGURE 1 – ENCLOSURE DIMENSIONS 5
FIGURE 2 – MOTHERBOARD TERMINAL IDENTIFICATION PART 1 6
FIGURE 3 – MOTHERBOARD TERMINAL IDENTIFICATION PART 2 7
FIGURE 4 – PRESCIENT^{III} BLOCK SCHEMATIC DIAGRAM 8
FIGURE 5 – DISPLAY.....16
FIGURE 6 – POWER SUPPLY CONNECTION DETAILS..24

Tables

TABLE 1 – CIRCUIT MODES.....19
TABLE 2 – FLOAT CHARGE VOLTAGES FOR POWERSONIC VRLA BATTERIES 24

1. Introduction

The **Prescient^{III}** Gas Extinguishing Control Panel is a stand-alone panel intended for use with gas extinguishing systems. It has been designed and approved to the European Standard EN 12094-1:2003, as well as the relevant parts of EN54-2:1997 & EN54-4:1997. The Prescient^{III} also incorporates the relevant recommendations of the British Code of Practice BS7273-1:2000.

The Prescient^{III} is fully compliant with the mandatory requirements of EN54 parts 2 and 4 along with the following options with requirements:

1. **EN54-2:1997 Clause 7.8** Outputs to fire alarm devices (sounders).
2. **EN54-2:1997 Clause 7.9** Outputs to fire alarm routing equipment.
3. **EN54-2:1997 Clause 8.9** Output to fault warning routing equipment.
4. **EN54-2:1997 Clause 10** Test condition.

The Prescient^{III} provides the following compulsory functions of BSEN 12094-1:2003 as listed in **clause 4.3.2**:

1. **a)** Reception & processing of at least one input triggering signal from an f.d.a.s. (Fire detection Zones 1 & 2) and an input triggering signal from manual triggering device(s) connected directly to the e.c.d. (Manual Release input).
2. **b)** Transmission of the extinguishing signal (Actuator circuits 1 & 2)
3. **c)** Activation of Alarm devices (Extinguishing Sounder circuit)
4. **d)** Indication of each condition unambiguously (LEDs & internal buzzer).
5. **e)** Transmission of the information of the incorrect status of components and of the information of the fault warning condition (Fault Signal Output).
6. **f)** Transmission of the information of the released condition (Gas Released Output)

The Prescient^{III} provides the following optional functions of BSEN 12094-1:2003 as listed in **clause 4.3.2**:

1. **g)** Extinguishing system delay.
2. **h)** Reception of a signal representing the flow of extinguishing agent (Discharged).
3. **i)** Monitoring of status of components:
   a. Low pressure/low weight
4. **j)** Reception of signal from an emergency hold device.
5. **k)** Separate monitoring of the status of non-electrical disable device(s) (Isolation valve).
6. **n)** Input from auto/manual selector switches.
7. **o)** Transmission of a triggering signal to equipment within the fire extinguishing system:
   b. Optical warning devices (Status indicators).
8. **q)** Transmission of signals to equipment outside the fire extinguishing system (Shut downs).
9. **r)** Reception of signal from an emergency abort device.
10. **u)** Activation of alarm devices with different signals. (2-stage sounders).

The Environmental Class as defined by **clause 4.2** is:

Class A: temperature range -5 to +40 Deg C.

The Prescient^{III} is fully compliant with the relevant recommendations of BS 7273-1:2000. The following safety critical aspects have been addressed:

1. **6.1.2** Avoidance of accidental discharge.
2. **6.4.3** A single short circuit in connections shall not cause an extinguishant release.
3. **6.4.4** Protection against over voltages which could cause an extinguishant release.

The Prescient^{III} integrates the functions of a fire alarm system and a gas extinguishing system. The Prescient^{III} monitors one extinguishing area and one non-extinguishing area for fire conditions and gives an appropriate audible and visual indication. Zones 1 & 2 are used for coincident detection in the extinguishing area and can be used to automatically release the extinguishing gas. The Auxiliary zone only provides an alarm indication. The Prescient^{III} also provides a facility for initiating the release of extinguishing gas manually.

The Prescient^{III} incorporates a 5 Amp switch-mode power supply with Power Factor correction.

2. General Description

The Prescient^{III} is housed in a metal enclosure with a Manual Release facility mounted on the door.
The following functions are available on the front of the panel:

1) Visual Indication of panel status via LEDs:
2) Numerical Display for the Extinguishant Release Timer.
3) Buttons for User Control.
4) Manual Extinguishant Release unit

The following functions are available inside the panel:

1) Three fully monitored Detection circuits.
2) One fully monitored Manual Release circuit.
3) Two fully monitored General Sounder circuits.
4) One fully monitored Extinguishing Sounder circuit.
5) Two fully monitored Actuator circuits.
6) Repeater outputs for:
   (i) Zone 1 Fire Detected
   (ii) Zone 2 Fire Detected

(iii) Auxiliary Zone Fire Detected
(iv) Manual Release Activated
(v) Extinguishing System Disabled
(vi) Isolation Valve Closed
(vii) Isolation Valve Abnormal
(viii) Emergency Hold Activated (configurable for auto & manual mode)
(ix) Emergency Abort Activated (configurable for manual only mode)

7) Two Auxiliary 24VDC supply outputs.

8) RS485 communication link to drive external Status Lamp Units.

9) Fully monitored inputs for:

(i) Gas Discharged Pressure Switch
(ii) Gas Low Pressure Switch
(iii) Gas Isolation Valve
(iv) Gas Trapped In Manifold
(v) Emergency Hold Switch
(vi) Emergency Abort Switch
(vii) Manual Only (Lock-Off) Switch
(viii) Remote Controls Switches (Sound alarms, Silence Alarms, Reset)

10) Fully Monitored Outputs (Configurable for Volt-Free operation) for:

(i) First Stage Shutdown
(ii) Second Stage Shutdown
(iii) Third Stage Shutdown
(iv) Auxiliary Fire Signal
(v) Auxiliary Fault Signal
(vi) Gas Released Signal

11) Volt-Free Relay Contacts for Auxiliary Equipment Reset

12) Terminals for Internal Standby Batteries

13) Site Configuration DIL Switches

14) Fault indication LEDs

15) Internal Buzzer

Figure 1 – Enclosure Dimensions

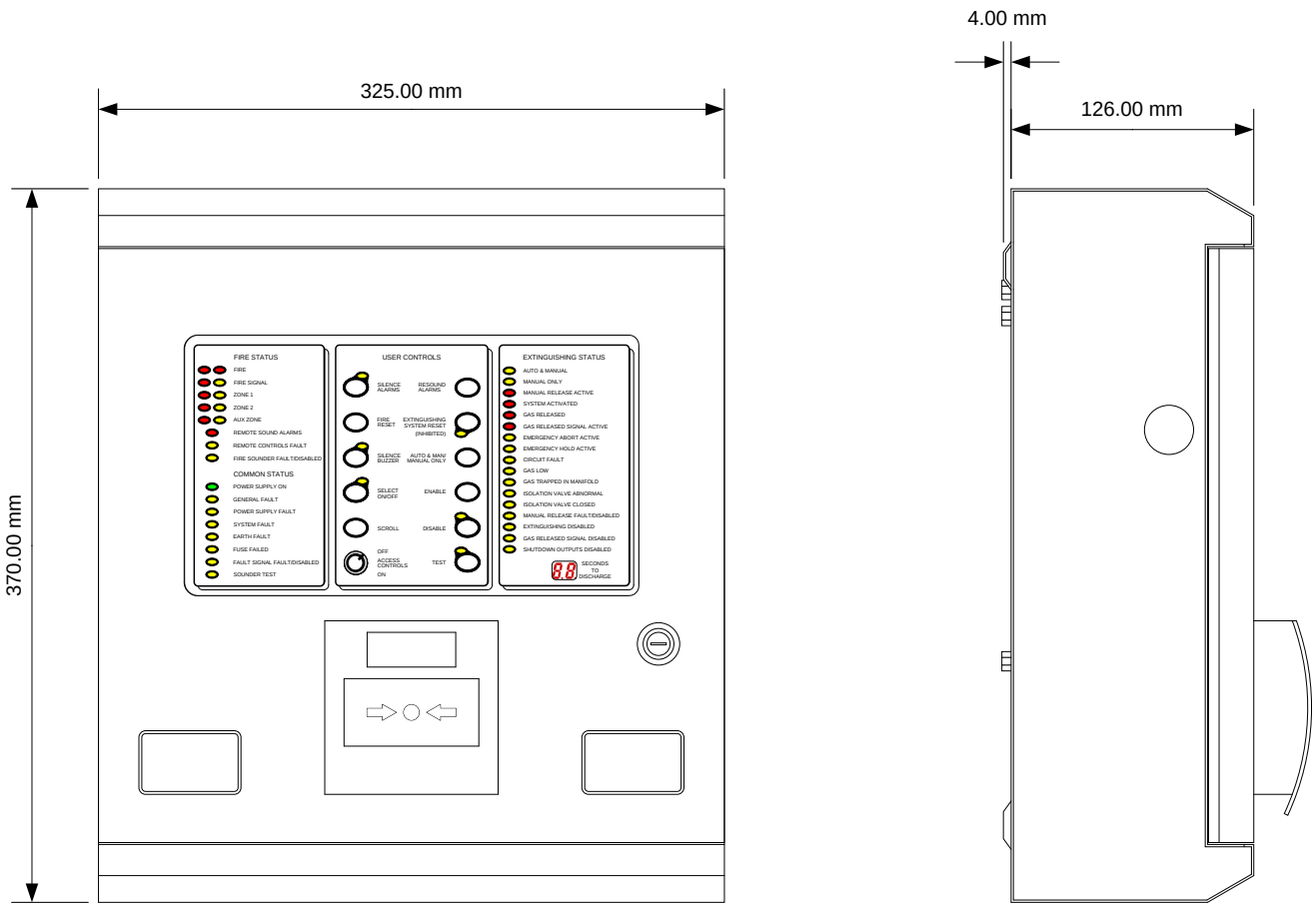

Figure 2 – Motherboard Terminal Identification Part 1

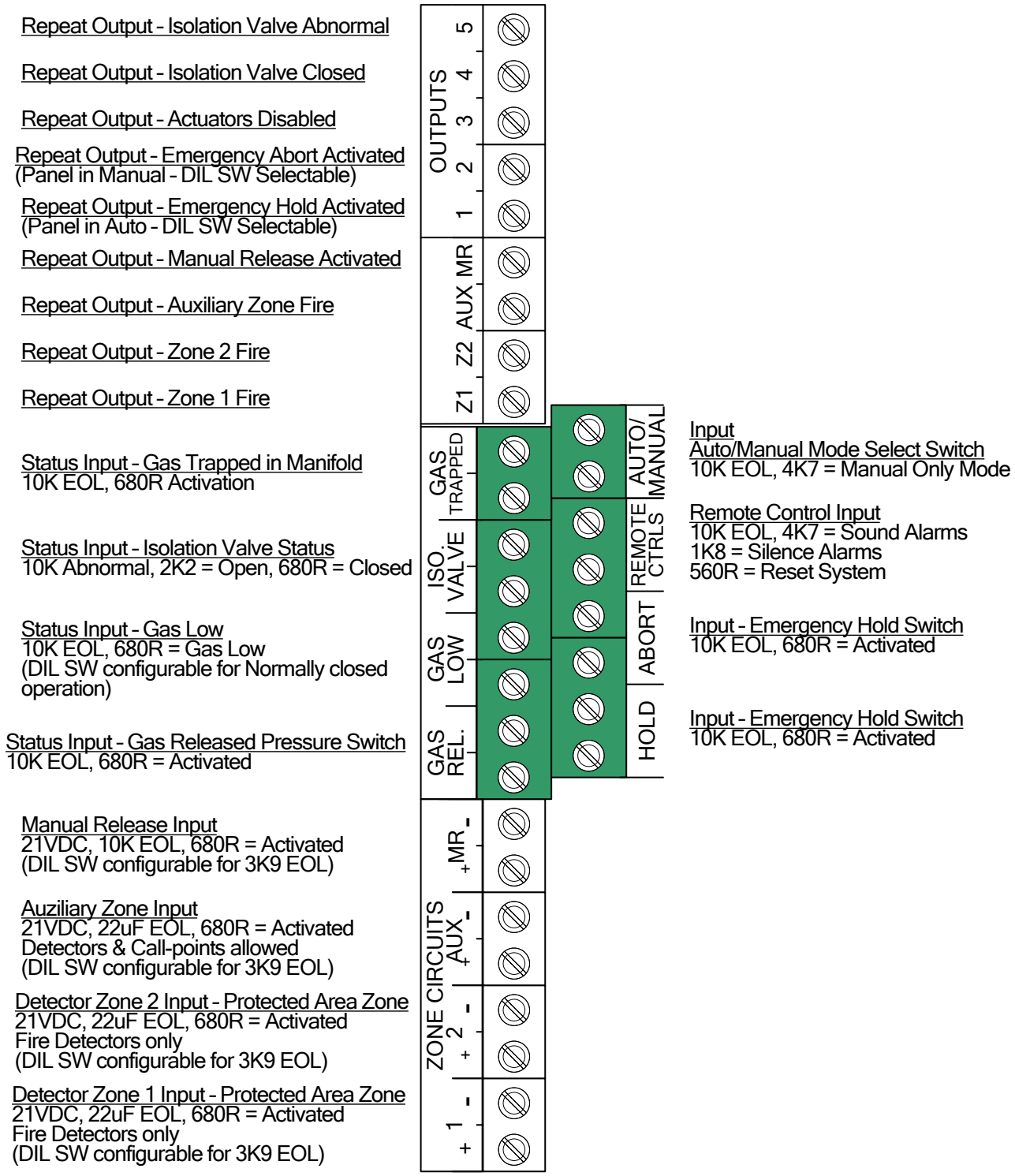

Figure 3 – Motherboard Terminal Identification Part 2

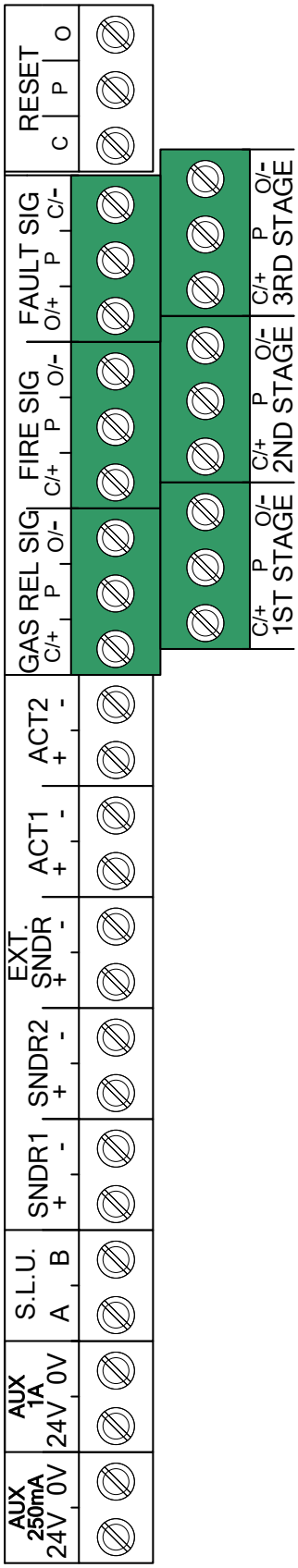

Reset Relay - Volt-FreeTerminals:
C = Normally Closed
P = Pole
O = Normally Open

Fault Relay - Volt-Free or Powered Terminals:
C/+ = Normally Closed or 24V out
P = Pole
O/- = Normally Open or 0V out

Fire Relay - Volt-Free or Powered Terminals:
C/+ = Normally Closed or 24V out
P = Pole
O/- = Normally Open or 0V out

Gas Released Relay - Volt-Free or Powered Terminals:
C/+ = Normally Closed or 24V out
P = Pole
O/- = Normally Open or 0V out

Actuator Circuit 2
+ = 1.2V in quiescent, 24V when activated
- = 3.8V in quiescent, 0V when activated

Actuator Circuit 1
+ = 1.2V in quiescent, 24V when activated
- = 3.8V in quiescent, 0V when activated

Extinguishing Sounder Circuit
+ = 1.2V in quiescent, 24V when activated
- = 3.8V in quiescent, 0V when activated

Fire Sounder Circuit 2
+ = 1.2V in quiescent, 24V when activated
- = 3.8V in quiescent, 0V when activated

Fire Sounder Circuit 1
+ = 1.2V in quiescent, 24V when activated
- = 3.8V in quiescent, 0V when activated

SLU 2-Wire RS485 Data Connection
Connect A at panel to A at SLU
Connect B at panel to B at SLU

1 Amp 24V DC Power Supply Output
Primarily for use with SLUs

250mA 24V DC Power Supply Output
Primarily for use with Repeat Outputs

Third Stage Relay
Volt-Free or Powered Terminals:
C/+ = Normally Closed or 24V out
P = Pole
O/- = Normally Open or 0V out

Second Stage Relay
Volt-Free or Powered Terminals:
C/+ = Normally Closed or 24V out
P = Pole
O/- = Normally Open or 0V out

First Stage Relay
Volt-Free or Powered Terminals:
C/+ = Normally Closed or 24V out
P = Pole
O/- = Normally Open or 0V out

Figure 4 – Prescient^{III} Block Schematic Diagram

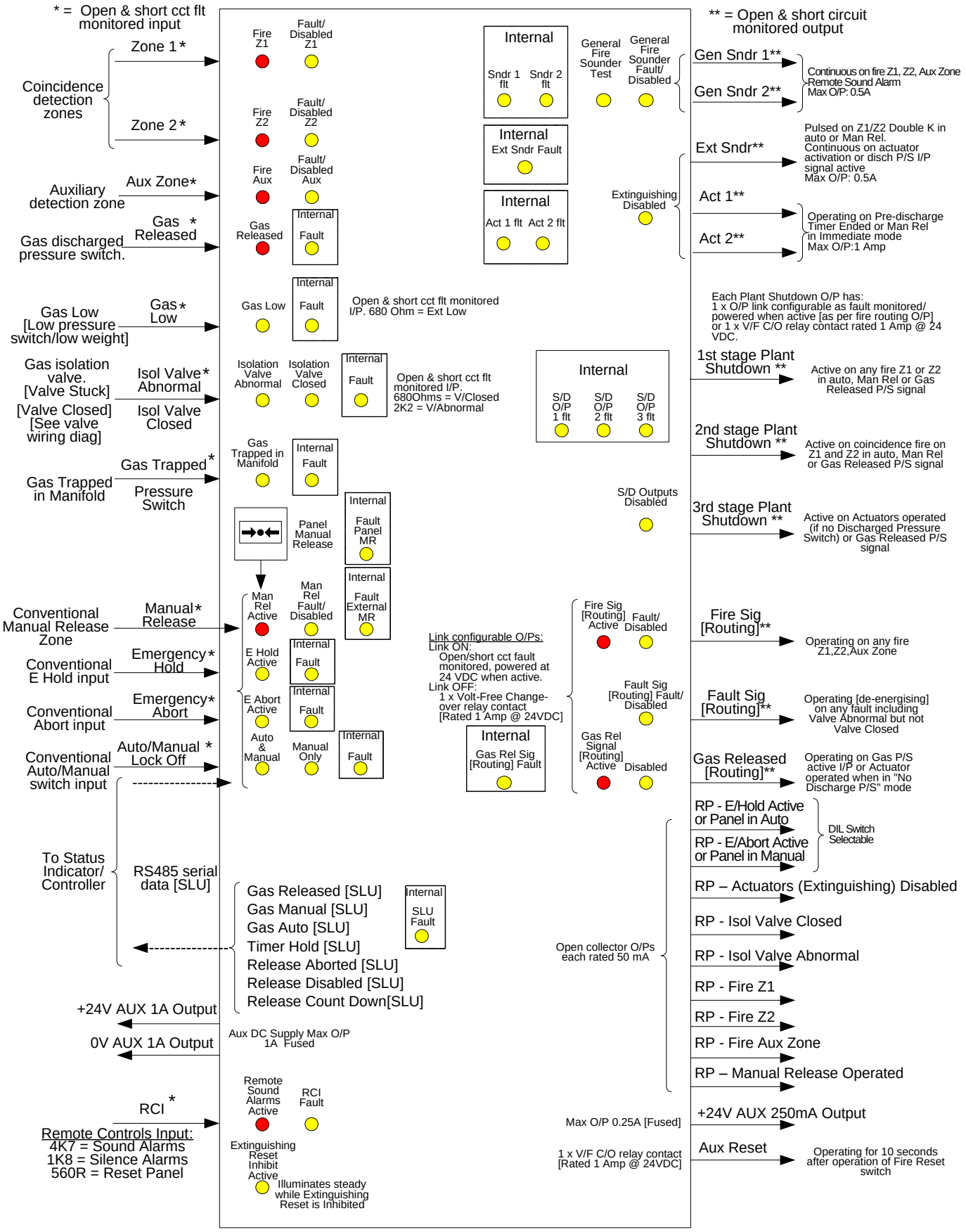

3. Functional Description

Note: Please refer to Section 10 for PCB Layout Diagram and Section 12 for Connection Diagrams.

3.1. Detection Zones (ZONE 1, ZONE 2 & AUX ZONE)

Three detection zone circuits are provided. They are monitored for Open Circuit Fault, Short Circuit Fault and Alarm (Fire). The End-Of-Line device is usually a 22uF capacitor (or 10k resistor if set to Intrinsically Safe mode) but can be configured for 3k9 resistor via a DIL switch on the motherboard.
A maximum of 32 devices may be connected on each zone (the actual number is dependent on the type of detector used, see section 7).

Manual Call Points may only be connected to the aux. zone.

In Automatic mode, zones 1 and 2 are normally used together to produce First Stage (pre-activated) and Second Stage (activated) fire alarms, resulting in automatic extinguishant discharge ('Double Knock' or 'Coincidence' Zones).

The auxiliary detection zone only provides a general fire indication.

Operation of Fire Reset causes the power supply to all three zones to be disconnected for 4 seconds to reset any activated detectors.

The Display Board has Fire and Fault LEDs for each of the zones.

The Display Board also provides User Controls for disabling the monitoring of individual zones.

3.2. Manual Release Facility (MR & Panel Mounted Call Point)

Two circuits are provided for operating the Manual Release facility.

1. The fourth detection zone is used as a Manual Release zone. It is monitored for Open Circuit Fault, Short Circuit Fault and Alarm. The End-Of-Line device is usually a 10k resistor but can be configured for 3k9 resistor via a DIL switch on the motherboard.

   It gives a Second Stage alarm in both automatic and manual modes, and initiates the Extinguishant release sequence when activated.

   This zone must only have manually operated devices connected to it e.g. Manual Call Points. The power supply to this zone is not switched off during panel Reset.
2. A Manual Release Call Point is mounted on the door of the panel and is monitored by a separate circuit for open & short circuit faults. The connection for the call point is on the rear of the display board.

The Display Board has Activated and Fault LEDs for the Manual Release facility, common to both circuits. Individual fault LEDs are provided on the motherboard inside the panel.

The Manual Release facility can be disabled, resulting in both circuits being disabled.

3.3. General Alarm Circuits (SNDR1 & SNDR2)

Two fully monitored general alarm circuits are provided. They are monitored for Open Circuit and Short Circuit faults. They are rated at 0.5A (electronically fused), 28VDC each. The End-Of-Line device is a 10k resistor (3k9 can also be used).

The Fire Sounder Fault/Disabled LED on the display flashes for any fault conditions on the General Alarm Circuits. Individual fault LEDs are provided on the motherboard inside the panel. Both circuits can be disabled as a group.

Note: The circuits are reverse-polarity monitored. The PCB terminals are marked for the active polarity. Ensure that all connected devices are polarised.

3.4. Extinguishing Alarm Circuit (EXT SNDR)

One fully monitored extinguishing alarm circuit is provided, monitored for Open Circuit and Short Circuit faults. It is rated at 0.5A (electronically fused), 28VDC. The End-Of-Line device is a 10k resistor (3k9 can also be used).

The Circuit Fault LED on the display flashes for any fault condition on the Extinguishing Alarm Circuit, with an individual fault LED on the motherboard inside the panel. The circuit can be disabled by disabling the extinguishing system (the Actuators are also disabled at the same time).

Note: The circuit is reverse-polarity monitored. The PCB terminals are marked for the active polarity. Ensure that all connected devices are polarised.

3.5. Actuator Circuits (ACT1 & ACT2)

Two fully monitored actuator circuits are provided. They are monitored for Open Circuit and Short Circuit faults (short circuit fault indication can be disabled). They are rated at 1A (fused), 28VDC each. The End-Of-Line device is a 10k resistor (3k9 can also be used).
The Circuit Fault LED on the display flashes for any fault condition on either Actuator Circuit, with individual fault LEDs on the motherboard inside the panel. Both circuits can be disabled by disabling the extinguishing system (the Extinguishing Alarm circuit is also disabled at the same time).

Note: The circuits are reverse-polarity monitored. The PCB terminals are marked for the active polarity. Ensure that all connected devices are polarised.

3.6. Repeater Outputs (Z1, Z2, AUX, MR, OUTPUTS 1, 2, 3, 4, 5)

Each repeater output consists of an Open Collector transistor driver capable of sinking up to 50mA. The following outputs are provided:

Z1 – Zone 1 Fire

Z2 – Zone 2 Fire

AUX – Auxiliary Zone Fire

MR – Manual Release Activated

OUTPUT 1 – Emergency Hold Activated (configurable for auto & manual mode)

OUTPUT 2 – Emergency Abort Activated (configurable for manual only mode)

OUTPUT 3 – Actuators (Extinguishing) Disabled

OUTPUT 4 – Isolation Valve Closed

OUTPUT 5 – Isolation Valve Abnormal

3.7. Auxiliary 24VDC Supply

The panel provides two auxiliary d.c. power supply outputs for connection to ancillary equipment:

1. (AUX 250mA: 24V, 0V) – This output is rated at 250mA (electronically fused), 24 Volts D.C.
2. (AUX 1A: 24V, 0V) – This output is rated at 1A (electronically fused), 24 Volts D.C.

3.8. Status Lamp Unit

The panel communicates with the Status Lamp Units (SLU) via two-wire RS485 serial data. The following indications can be provided, dependent on SLU type:

1. Emergency Abort Activated
2. Emergency Hold Activated
3. Gas Released
4. Auto & Manual
5. Manual Only
6. Extinguishing Disabled
7. Local Fault
8. Seconds Remaining to Discharge (fully functional SLU only)

The SLU can provide the following controls, dependent on SLU type:

1. Manual Release
2. Emergency Abort
3. Emergency Hold
4. Auto & Manual / Manual Only

The controls on the SLU can be transmitted via the serial data link or hard-wired via conventional circuits on the panel (see 3.9 below).

3.9. Remote Inputs

3.9.1. Remote Controls

This is a fully monitored input, providing: open & short circuit fault monitoring, Silence Alarms, Re-sound Alarms and Panel Reset. The EOL device is a 10k resistor.

Remote Sound Alarms:

- Non-latching.
- 4k7 = activate general sounders.
- When activated – steady 'Remote Sound Alarms' indication and continuous operation of general sounders.
- When deactivated – 'Remote Sound Alarms' indication clears and general sounders stop.

Remote Silence Alarms:

- Single Operation.
- 1k8 = silence active sounders (silencing of extinguishing sounders is inhibited until the Discharged condition is active)
- When activated – same operation as pressing the Silence Alarms button.
- When deactivated – no action

Remote Reset:

- Single Operation.
- 560R = Reset Fire System & Extinguishing System (reset of the extinguishing system can be inhibited until the inhibit timer ends or Abort is operated)
- When activated – Resets all indications on the Fire Alarm section of the panel. Only Resets indications on the Extinguishing section of the panel if the Reset Inhibit is inactive.
- When deactivated – no action

3.9.2. GAS TRAPPED

This is a fully monitored input, providing open & short circuit fault monitoring. The EOL device is a 10k resistor, activated by a 680R resistor. Activation illuminates the GAS TRAPPED IN MANIFOLD LED and raises the general fault condition.

3.9.3. Auto/Manual Lock-Off Switch (AUTO/MANUAL)

The Auto/Manual input is fully monitored for open & short circuit faults. The End-Of-Line device is a 10k resistor, activated by a 4k7 resistor. In the active state the panel is placed in Manual Only mode and the yellow Manual Only LED on the display board pulses. Operation of the Auto/Manual button on the display board has no effect while the input is active. The input allows for the connection of Auto/Manual Lock-Off switches on SLUs. Door Lock switches may also be connected via terminals on the SLUs. The total number of Auto/Manual switches & Door Lock switches that can be connected is 14. This allows for 7 SLUs, each with an auto/manual keyswitch and a door lock switch fitted. See the SLU installation manual for more details.

3.9.4. Low Pressure Fault (GAS LOW)

This is a fully monitored input, providing open & short circuit fault monitoring. The EOL device is a 10k resistor, activated by a 680R resistor. Activation illuminates the GAS LOW LED and

raises the general fault condition. An open or short circuit fault is indicated by the Circuit Fault LED on the display and a Gas Low Fault LED on the motherboard. The input is configurable for normally open or normally closed operation via a DIL switch on the motherboard.

3.9.5. Extinguishing Isolation Valve Status (ISO. VALVE)

This is a fully monitored input, providing open & short circuit fault monitoring. The EOL device is a 10k resistor, giving an 'ISOLATION VALVE ABNORMAL' indication. An open or short circuit fault is indicated by the Circuit Fault LED on the display and a Isolation Valve Fault LED on the motherboard. Three states are possible on the input:

1. **Valve Closed**:
   Activated by a 680R resistor, flashing the Valve Closed LED on the display board & pulsing the internal buzzer.
2. **Valve Open**:
   Activated by a 2k2 resistor, no indication is given on the panel as this is the healthy state for the input.
3. **Valve Abnormal**:
   Activated by the 10k EOL resistor, flashing the Valve Abnormal LED on the display board & raising a general fault indication. A 2-second delay is applied to the abnormal condition to avoid momentary activation during normal movement of the valve between open and closed positions.

See Connection Diagram in section 12.3 for details.

NOTE: The healthy state for the input is VALVE OPEN and therefore, if the input is not used, the input should have a 2k2 resistor fitted.

3.9.6. Gas Released Pressure Switch (GAS REL.)

This is a fully monitored input, providing open & short circuit fault monitoring. The EOL device is a 10k resistor. An open or short circuit fault is indicated by the Circuit Fault LED on the display and a Gas Released Fault LED on the motherboard. The input is activated by a 680R resistor, illuminating the Gas Released LED on the display, the Extinguishing sounder circuit, the Gas Released Signal & all three shutdown outputs.

3.9.7. Emergency Hold (HOLD)

This is a fully monitored input, providing open & short circuit fault monitoring. The EOL device is a 10k resistor. An open or short circuit fault is indicated by the Circuit Fault LED on the display and a Hold Fault LED on the motherboard. If a fault occurs on the input during the Activated or Discharged condition then the fault indication is still given but the Hold Active LED is illuminated steady and the Hold condition is established until the fault is removed. **This fault condition prevents the Extinguishant release.**

The input is activated by a 680R resistor, illuminating the Emergency Hold Active LED on the display and resetting & holding the pre-discharge delay timer.

NOTE: If more than three Emergency Hold switches connected to the Hold input are operated simultaneously then a short circuit fault will be detected. If this occurs while the Pre-discharge timer is running, then the Timer will still be reset and held until all switches are released. Use only non-latching switches which return to open contacts when the switch is released.

NOTE: If an SLU with a Hold switch is configured to transmit the Hold signal via the serial communications path, a communication fault on this path will initiate the Hold condition, as described above, and the release of extinguishant will be inhibited.

3.9.8. Emergency Abort Input (ABORT)

This is a fully monitored input, providing open & short circuit fault monitoring. The EOL device is a 10k resistor. An open or short circuit fault is indicated by the Circuit Fault LED on the display and an Abort Fault LED on the motherboard. In addition, the Abort Active LED will pulse if the system is not in the Activated or Discharged condition, clearing when the fault is cleared. If a fault occurs on the input during the Activated or Discharged condition then the fault indication is still given but the Abort Active LED is illuminated steady and the Abort condition is latched until reset. **This fault condition prevents the Extinguishant release.**

The input is activated by a 680R resistor, illuminating the Emergency Abort Active LED on the display and stopping the Extinguishant release. The active abort condition is latched until the input is cleared and the Extinguishing Reset button is pressed.

NOTE: Use only LATCHING switches which need to be manually returned to the OFF position (this is a requirement of EN 12094-1:2003 clause 4.27.2)

NOTE: If an SLU with an Abort switch is configured to transmit the Abort signal via the serial communications path, a communication fault on this path will initiate the Abort condition, as described above, and the release of extinguishant will be aborted.

3.10. Relay Contacts

Other than the Auxiliary Reset Relay, all Relay outputs can be configured as either powered and monitored outputs or Volt-free relay contacts. The factory default is powered and monitored outputs as required by EN54-2:1997 & EN12094-1:2003.

3.10.1. First Stage Shutdown (1ST STAGE)

The First Stage Shutdown Relay is energised when the panel enters the pre-activated condition. This occurs when the panel is in the AUTOMATIC & MANUAL mode and a fire occurs on zone 1 or zone 2. The relay is also energised if the panel enters the 2nd Stage or 3rd Stage condition (see 3.10.2 and 3.10.3).

A triple jumper link allows the output to be powered and monitored (Link ON) or Volt-Free (Link OFF).

In the Monitored mode, an open or short circuit fault on the field wiring illuminates the Circuit Fault LED on the display and the 1st Stage Shutdown Fault LED on the motherboard.

In the Volt-free mode, clean contacts for Pole, Normally Open & Normally Closed are available, rated at 1A, 30VDC.

3.10.2. Second Stage Shutdown (2ND STAGE)

The Second Stage Shutdown Relay is energised when the panel enters the activated condition. This occurs when the panel is in the AUTOMATIC & MANUAL mode and a fire occurs on zone 1 and zone 2, or the Manual Release is operated (in Auto or Manual mode). The relay is also energised if the panel enters the 3rd Stage condition (see 3.10.3).

A triple jumper link allows the output to be powered and monitored (Link ON) or Volt-Free (Link OFF).

In the Monitored mode, an open or short circuit fault on the field wiring illuminates the Circuit Fault LED on the display and the 2nd Stage Shutdown Fault LED on the motherboard.

In the Volt-free mode, clean contacts for Pole, Normally Open & Normally Closed are available, rated at 1A, 30VDC.

3.10.3. Third Stage Shutdown (3RD STAGE)

The Third Stage Shutdown Relay is energised when the pre-discharge delay timer ends & the actuator circuits are operated. The relay is also energised if the panel enters the discharged condition due to operation of the Gas Released Pressure Switch input (see 3.10.4).

A triple jumper link allows the output to be powered and monitored (Link ON) or Volt-Free (Link OFF).

In the Monitored mode, an open or short circuit fault on the field wiring illuminates the Circuit Fault LED on the display and the 3rd Stage Shutdown Fault LED on the motherboard.

In the Volt-free mode, clean contacts for Pole, Normally Open & Normally Closed are available, rated at 1A, 30VDC.

3.10.4. Gas Discharged (GAS REL SIG)

The Gas Discharged Relay is energised when the Gas Released Pressure Switch input is activated, or when the actuator circuits are operated if the panel is configured for NO PRESSURE SWITCH.

A triple jumper link allows the output to be powered and monitored (Link ON) or Volt-Free (Link OFF).

In the Monitored mode, an open or short circuit fault on the field wiring illuminates the Circuit Fault LED on the display and the Gas Released signal Fault LED on the motherboard.

In the Volt-free mode, clean contacts for Pole, Normally Open & Normally Closed are available, rated at 1A, 30VDC.

3.10.5. Fire Signal (FIRE SIG)

The Fire Signal Relay is energised when zones 1, 2 or Aux zone detect a fire condition.

A triple jumper link allows the output to be powered and monitored (Link ON) or Volt-Free (Link OFF).

In the Monitored mode, an open or short circuit fault on the field wiring illuminates the Fire Signal Fault LED on the display.

In the Volt-free mode, clean contacts for Pole, Normally Open & Normally Closed are available, rated at 1A, 30VDC.

3.10.6. Fault Signal (FAULT SIG)

The Fault Signal Relay is a fail-safe relay and is normally energised. It is de-energised for any fault condition on the panel.

A triple jumper link allows the output to be powered and monitored (Link ON) or Volt-Free (Link OFF).

In the Monitored mode, an open or short circuit fault on the field wiring illuminates the Fault Signal Fault LED on the display.

In the Volt-free mode, clean contacts for Pole, Normally Open & Normally Closed are available, rated at 1A, 30VDC.

3.10.7. Auxiliary Reset (RESET)

The Auxiliary Reset Relay is a single pole change-over relay and is energised briefly when the panel is in Fire Reset mode. The relay is energised for 10 seconds. This is to allow ancillary equipment such as Beam Detectors to be reset. The relay has no powered and monitored mode and only volt-free contacts for Pole, Normally Open & Normally Closed are available, rated at 1A, 30VDC.

3.11. Internal Standby Batteries

Terminals are provided to allow connection of one set of internal standby batteries. The Charger Circuit is monitored for the following:

- Battery or associated wiring disconnected.
- Battery fuse blown
- Low battery voltage (<15.7V ±0.4V)
- Battery and interconnection resistance is 0.35Ω or higher.

3.12. Function Enable/Disable Switches

Two sets of DIL switches and one jumper link are available on the motherboard to allow the panel to be configured for additional site-specific functions:

3.12.1. Function Select Switch

SW1

1 (ON)	CONFIG I/S INPUTS
2	PRE-DISCHARGE DELAY 5S
3	PRE-DISCHARGE DELAY 10S
4	PRE-DISCHARGE DELAY 20S
5	PRE-DISCHARGE DELAY 40S
6	SILENT ZONE TEST
7	BUZZER DISABLE
8	LATCHED FAULTS
9	INSTANT MANUAL RELEASE
10	BUZZER PULSES AT END OF DELAY
11	ZONES 1 & 2 SINGLE KNOCK
12	NO DISCHARGE PRESSURE SWITCH

SW2

1 (ON)	ACTUATOR S/C DISABLE	
2	1 MIN	RESET INHIBIT PERIOD
3	2 MIN	
4	4 MIN	
5	8 MIN	
6	16 MIN	
7	CLEAR ACTUATORS AFTER 1 MIN	
8	SILENCE ALARMS BEFORE RESET	
9	OUTPUT 1-AUTO, 2-MANUAL	
10	CONFIG SLU	
11	3K9 EOL	
12	N/C GAS LOW I/P	

This consists of two sets of 12-way DIL switches, providing the following options:

3.12.1.1. CONFIG I/S INPUTS

When in the ON position, enables zones 1, 2, Aux zone and Manual Release input to be individually configured for standard or intrinsically safe monitoring. The circuits need to be configured for I/S monitoring if Galvanic Isolators or Zener Barriers are connected. I/S zones will then be monitored for a 10k EOL resistor and different monitoring limits due to the I/S barrier/isolator series load. See section 4.2.2 for configuration details.

3.12.1.2. PRE-DISCHARGE DELAY (5S, 10S, 20S, 40S)

These four switches allow the Pre-discharge delay timer to be configured from 0 to 60 seconds in 5-second increments. Any of the four switches in the ON position adds to the delay value, up to a maximum of 60 seconds.

Delay Length (Seconds)	SW1-2 (5S)	SW1-3 (10S)	SW1-4 (20S)	SW1-5 (40S)
0	OFF	OFF	OFF	OFF
5	**ON**	OFF	OFF	OFF
10	OFF	**ON**	OFF	OFF
15	**ON**	**ON**	OFF	OFF
20	OFF	OFF	**ON**	OFF
25	**ON**	OFF	**ON**	OFF
30	OFF	**ON**	**ON**	OFF
35	**ON**	**ON**	**ON**	OFF
40	OFF	OFF	OFF	**ON**
45	**ON**	OFF	OFF	**ON**
50	OFF	**ON**	OFF	**ON**
55	**ON**	**ON**	OFF	**ON**
60	N/A	N/A	**ON**	**ON**

3.12.1.3. SILENT ZONE TEST

Switch OFF:- A fire alarm on any zone in Test Mode will operate the appropriate zonal fire indicator and the general sounder circuits for four seconds.

Switch ON:- A fire alarm on any zone in Test Mode will operate the appropriate zonal fire indicator but will NOT operate the general sounder circuits.

3.12.1.4. BUZZER DISABLE

Switch OFF:- The internal buzzer operates for any fire, fault or display button operation.

Switch ON:- The internal buzzer only operates on operation of any display button.

Note: This is not compliant with EN54-2 or EN12094-1. Provided for commissioning purposes only.

3.12.1.5. LATCHED FAULTS

Switch OFF:- All fault indications are non-latching and clear once the fault clears.

Switch ON:- All fault indications are latching and require a manual reset via the FIRE RESET and/or EXTINGUISHING SYSTYEM RESET buttons.

3.12.1.6. INSTANT MANUAL RELEASE

Switch OFF:- Operation of Manual Release starts the Pre-discharge delay timer.

Switch ON:- Operation of Manual Release bypasses the Pre-discharge delay timer & operates the actuator circuits immediately.

3.12.1.7. BUZZER PULSES AT END OF DELAY

Switch OFF:- No change in the state of the internal buzzer during the last five seconds of the Pre-discharge delay timer.

Switch ON:- The internal buzzer pulses during the last five seconds of the Pre-discharge delay timer.

3.12.1.8. ZONES 1 & 2 SINGLE KNOCK

Switch OFF:- If the system is set to Auto & Manual mode, a fire condition on both zones

1 & 2 is required to start the pre-discharge delay timer.

Switch ON:- If the system is set to Auto & Manual mode, a fire condition on either zone 1 or zone 2 will start the pre-discharge delay timer.

3.12.1.9. NO DISCHARGE PRESSURE SWITCH

Switch OFF:- The Panel only indicates SYSTEM DISCHARGED when the GAS REL. input is activated (via a Discharge Pressure switch).

Switch ON:- The panel indicates SYSTEM DISCHARGED as soon as the actuator circuits are activated.

3.12.1.10. ACTUATOR S/C DISABLE

Switch OFF:- The actuator circuits are monitored for open & short circuit faults.

Switch ON:- The actuator circuits are only monitored for open circuit faults. Used for open-circuit fault monitoring of the solenoid coil without a series end-of-line resistor.

3.12.1.11. RESET INHIBIT PERIOD

Five switches allow the Extinguishing System Reset Inhibit timer to be configured from 0 to 30 minutes in 1-minute increments. Any of the five switches in the ON position adds to the timer value, up to a maximum of 30 minutes.

Reset Inhibit Length (minutes)	SW2-2 (1min)	SW2-3 (2min)	SW2-4 (4min)	SW2-5 (8min)	SW2-6 (16min)
0	OFF	OFF	OFF	OFF	OFF
1	**ON**	OFF	OFF	OFF	OFF
2	OFF	**ON**	OFF	OFF	OFF
3	**ON**	**ON**	OFF	OFF	OFF
4	OFF	OFF	**ON**	OFF	OFF
5	**ON**	OFF	**ON**	OFF	OFF
6	OFF	**ON**	**ON**	OFF	OFF
7	**ON**	**ON**	**ON**	OFF	OFF
8	OFF	OFF	OFF	**ON**	OFF
9	**ON**	OFF	OFF	**ON**	OFF
10	OFF	**ON**	OFF	**ON**	OFF
11	**ON**	**ON**	OFF	**ON**	OFF
12	OFF	OFF	**ON**	**ON**	OFF
13	**ON**	OFF	**ON**	**ON**	OFF
14	OFF	**ON**	**ON**	**ON**	OFF
15	**ON**	**ON**	**ON**	**ON**	OFF
16	OFF	OFF	OFF	OFF	**ON**
17	**ON**	OFF	OFF	OFF	**ON**
18	OFF	**ON**	OFF	OFF	**ON**
19	**ON**	**ON**	OFF	OFF	**ON**
20	OFF	OFF	**ON**	OFF	**ON**
21	**ON**	OFF	**ON**	OFF	**ON**
22	OFF	**ON**	**ON**	OFF	**ON**
23	**ON**	**ON**	**ON**	OFF	**ON**
24	OFF	OFF	OFF	**ON**	**ON**
25	**ON**	OFF	OFF	**ON**	**ON**
26	OFF	**ON**	OFF	**ON**	**ON**
27	**ON**	**ON**	OFF	**ON**	**ON**
28	OFF	OFF	**ON**	**ON**	**ON**
29	**ON**	OFF	**ON**	**ON**	**ON**
30	OFF	**ON**	**ON**	**ON**	**ON**
30	**ON**	**ON**	**ON**	**ON**	**ON**

3.12.1.12. CLEAR ACTUATORS AFTER 1 MIN

Switch OFF:- The actuator circuits are energised until the Extinguishing System is reset.

Switch ON:- The actuator circuits are only energised for 1 minute and then are de-energised.

NOTE:

This facility is only to be used where the actuators connected to the actuator circuits remain activated when the power is removed and require manual resetting. This facility is not intended to control the gas discharge period. It is only provided as a means to reduce current consumption during gas discharge.

3.12.1.13. SILENCE ALARMS BEFORE RESET

Switch OFF:- The panel can be reset from the alarm condition without first silencing the alarms. (A requirement of EN54-2)

Switch ON:- The panel cannot be reset from the alarm condition until the alarms have been silenced. (A recommendation of BS5839).

3.12.1.14. AUTO/MANUAL OUTPUTS

Switch OFF:- Open Collector Output 1 operates on Emergency Hold Active. Open Collector Output 2 operates on Emergency Abort Active.

Switch ON:- Open Collector Output 1 operates when panel is in AUTO & MANUAL mode. Open Collector Output 2 operates when panel is in MANUAL ONLY mode.

3.12.1.15. CONFIG SLU

When in the ON position, allows the type code of any connected SLUs to be configured on the panel. See section 4.2.3 for configuration details.

3.12.1.16. 3k9 EOL

When in the ON position, zones 1, 2, Aux Zone & Manual Release are monitored for a 3k9 End-Of-Line device. Allows backward compatibility when replacing older systems with this panel.

3.12.1.17. N/C LOW PRESSURE I/P

Switch OFF:- The Gas Low input monitors a normally open switch, i.e. activated by a 680R resistor.

Switch ON:- The Gas Low input monitors a normally closed switch i.e. activated by disconnection of the 680R resistor.

3.12.2. Link For Earth Fault Monitoring

This is a single jumper link located at the bottom right of the control board (J22). When present, it allows the panel to monitor for earth faults on the cables coming into the panel. If this link is **REMOVED**, it physically isolates the internal control board from earth, thus **disabling** the earth fault monitoring facility.

3.13. Fault LEDs

- SHUTDOWN 3 FAULT
- SHUTDOWN 2 FAULT
- SHUTDOWN 1 FAULT
- ACTUATOR 2 FAULT
- ACTUATOR 1 FAULT
- EXT SNDER FAULT
- SNDER 2 FAULT
- SNDER 1 FAULT
- AUTO/MAN FAULT
- FIELD MR FAULT
- PANEL MR FAULT
- ABORT FAULT
- HOLD FAULT
- GAS TRAPPED FLT
- ISOLATION VALVE FLT
- GAS LOW FAULT
- GAS RELEASED FLT
- SLU FAULT
- CONFIG ON
- GAS SIGNAL FLT
- MAINS FAULT
- BATT/CHARGE FAULT

Twenty-two yellow LEDs are mounted on the control board to indicate the following faults:

SHUTDOWN 3 FAULT	Illuminates for an open or short circuit fault on the 3rd Stage monitored Output.
SHUTDOWN 2 FAULT	Illuminates for an open or short circuit fault on the 2nd Stage monitored Output.
SHUTDOWN 1 FAULT	Illuminates for an open or short circuit fault on the 1st Stage monitored Output.
ACTUATOR 2 FAULT	Illuminates for an open or short circuit fault on the Actuator 2 Output.
ACTUATOR 1 FAULT	Illuminates for an open or short circuit fault on the Actuator 1 Output.
EXT SNDER FAULT	Illuminates for an open or short circuit fault on the Extinguishing Sounder Output.
SNDER 2 FAULT	Illuminates for an open or short circuit fault on the General Sounder 2 Output.
SNDER 1 FAULT	Illuminates for an open or short circuit fault on the General Sounder 1 Output.
AUTO/MAN FAULT	Illuminates for any open or short circuit fault on the Auto/Manual Input.
FIELD MR FAULT	Illuminates for any open or short circuit fault on the Manual Release Zone Input.
PANEL MR FAULT	Illuminates for any open or short circuit fault on the Panel Mounted Manual Release.
ABORT FAULT	Illuminates for any open or short circuit fault on the Emergency Abort input.
HOLD FAULT	Illuminates for any open or short circuit fault on the Emergency Hold input.
GAS TRAPPED FLT	Illuminates for any open or short circuit fault on the Gas Trapped input.
ISOLATION VALVE FLT	Illuminates for any open or short circuit fault on the Isolation Valve input.
GAS LOW FAULT	Illuminates for any open or short circuit fault on the Gas Low input.
GAS RELEASED FLT	Illuminates for any open or short circuit fault on the Gas Released input.
SLU FAULT	Illuminates for a fault on any Status Lamp Unit.
CONFIG ON	Illuminates when either the CONFIG I/S INPUTS or the CONFIG SLU DIL switch is in the ON position. It indicates that the EEPROM on control board is write-enabled.
GAS SIGNAL FLT	Illuminates for any open or short circuit fault on the Gas Released Signal output.
MAINS FAULT	Illuminates if the AC mains input voltage to the power supply is lost or is less than the required minimum for correct operation of the power supply.
BATT/CHARGE FAULT	Illuminates for any of the faults described in section 3.11.

The General Fault LED on the Display board also pulses for any of the above faults.

3.14. Internal Buzzer

The internal buzzer provides an audible indication to compliment the visual indications provided via the LEDs on the panel. The buzzer has various modes as follows:

1. **Fault Indication** - Pulse, 1 second On, 3 seconds OFF
   The buzzer can be silenced.
2. **Alarm Indication** – Pulse, 1 second On, 1 second OFF
   The buzzer can be silenced.
3. **Buzzer Pulse End Of Delay** - Pulse, ½ second On, ½ second OFF (Optional)
   The buzzer cannot be silenced.

3.15. Display Board – General

The Display board is connected to the internal control board via a 16-way ribbon cable and polarised ribbon socket. A polarised 16-way header is provided on the main control board at position J1.

The Display is divided into three windows for clarity. User Controls are positioned in the central window, with status LEDs in the left & right windows.

The left window displays the status of the Fire Alarm section of the panel, as well as indications which are common to both the Fire Alarm section and the Extinguishing section. The right window is dedicated to displaying the status of the Extinguishing section of the panel. See Figure 5 for details.

Figure 5 – Display

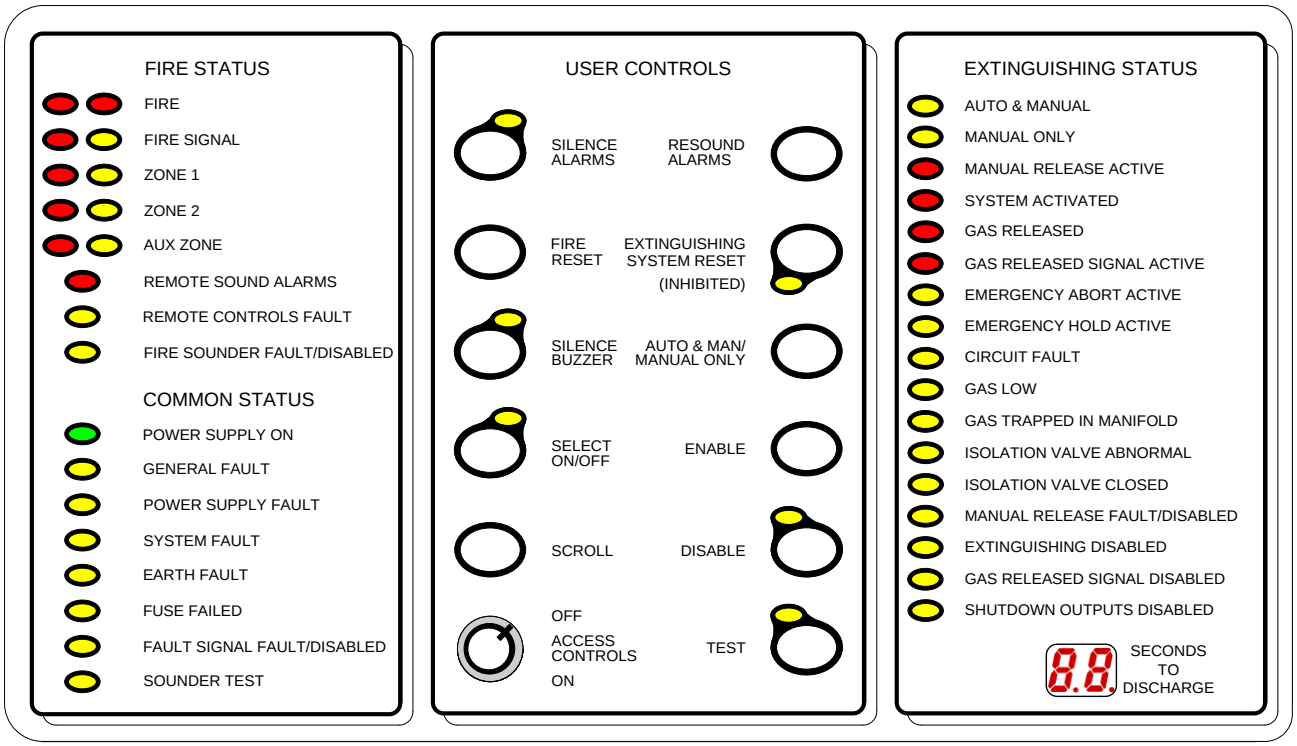

3.16. Display Board – Fire Status Indications

3.16.1. FIRE

These two red LEDs are normally off, pulsing for a fire alarm on zones 1, 2, or aux zone. The LEDs are illuminated steady if the general sounders are silenced during the fire alarm.

3.16.2. FIRE SIGNAL

The Fire Signal output status is displayed by two LEDs.

The red LED is normally off, illuminating steady when the Fire Signal output is active.

The yellow LED is normally off, pulsing for an open or short circuit fault on the Fire Signal output. The LED is illuminated steady if the Fire Signal output is disabled.

3.16.3. ZONE 1

The Zone 1 input status is displayed by two LEDs.

The red LED is normally off, pulsing if a fire condition is detected on zone 1, illuminating steady when the alarm is accepted (by operation of the Silence Alarms button).

The yellow LED is normally off, pulsing for an open or short circuit fault on the Zone 1 input. The LED is illuminated steady if the Zone 1 input is disabled or selected to the Test mode.

3.16.4. ZONE 2

The Zone 2 input status is displayed by two LEDs.

The red LED is normally off, pulsing if a fire condition is detected on zone 2, illuminating steady when the alarm is accepted (by operation of the Silence Alarms button).

The yellow LED is normally off, pulsing for an open or short circuit fault on the Zone 2 input. The LED is illuminated steady if the Zone 2 input is disabled or selected to the Test mode.

3.16.5. AUX ZONE

The Aux Zone input status is displayed by two LEDs.

The red LED is normally off, pulsing if a fire condition is detected on the aux zone, illuminating steady when the alarm is accepted (by operation of the Silence Alarms button).

The yellow LED is normally off, pulsing for an open or short circuit fault on the aux zone input. The LED is illuminated steady if the aux zone input is disabled or selected to the Test mode.

3.16.6. REMOTE SOUND ALARMS

The REMOTE CONTROLS input status is displayed by two LEDs.

The red LED is normally off, illuminating steady when the input registers a Sound Alarms.

The yellow LED is normally off, pulsing for an open or short circuit fault on the Remote Controls input.

3.16.7. FIRE SOUNDER FAULT/DISABLED

This is a yellow LED which is normally off, pulsing for an open or short circuit on either of the general sounder circuits, illuminating steady when the general sounder circuits are disabled. A separate fault LED for each sounder circuit is also provided on the control board inside the panel.

3.17. Display Board – Common Status Indications

3.17.1. POWER SUPPLY ON

This is a green LED which is illuminated steady as long as there is a supply of power to the panel.

3.17.2. GENERAL FAULT

This is a yellow LED that is normally OFF. The LED pulses for any fault on the panel.

3.17.3. POWER SUPPLY FAULT

This is a yellow LED that is normally OFF. The LED pulses if there is a mains or battery failure.

3.17.4. SYSTEM FAULT

This is a yellow LED that is normally OFF. The LED pulses if the CONFIG I/S INPUTS or CONFIG SLU DIL switch is in the ON position. The LED is steady if the microprocessor fails to execute the software correctly or an internal memory corruption is detected.

Note: The system is completely non-functional and alternative fire detection measures should be implemented.

3.17.5. EARTH FAULT

This is a yellow LED that is normally OFF. The LED pulses if there is a low resistance to earth on any of the field cables.

3.17.6. FUSE FAILED

This is a yellow LED that is normally OFF. The LED pulses if either of the electronic fuses on the two auxiliary 24V supply outputs are activated due to excessive loading.

3.17.7. FAULT SIGNAL FAULT/DISABLED

The is a yellow LED which is normally off, pulsing for an open or short circuit fault on the Fault Signal output. The LED is illuminated steady if the Fault Signal output is disabled.

3.17.8. SOUNDER TEST

This is a yellow LED which is normally off, illuminating steady when the three sounder circuits are in the TEST mode.

3.18. Display Board – Extinguishing Status Indications

3.18.1. AUTO & MANUAL

This is a yellow LED that is illuminated steady if the actuators can be operated both automatically (via a fire alarm on zones 1 & 2) and manually (via manual release).

3.18.2. MANUAL ONLY

This is a yellow LED that is illuminated steady if the actuators can only be operated manually (via manual release). The LED pulses if an AUTO/MANUAL switch in the field is set to Manual

3.18.3. MANUAL RELEASE ACTIVE

This is a red LED that is normally off, pulsing if manual release is activated either by operation of the Manual Release Call Point on the front of the panel or via the operation of a manual release unit connected to the Manual Release Zone input. The indication becomes steady when the panel is in the Alarm Silenced condition.

3.18.4. SYSTEM ACTIVATED

This is a red LED that is normally OFF, pulsing during the pre-activated condition (1st Stage), illuminating steady during the activated condition (2nd Stage). The LED remains illuminated until the Extinguishing System is reset.

3.18.5. GAS RELEASED

This is a red LED that is normally OFF. It is illuminated steady when the panel is in the Gas Released condition. This normally occurs when the GAS RELEASED input is activated, but can be configured to occur as soon as the actuator circuits are energised (via the NO DISCHARGE PRESSURE SWITCH DIL switch). The LED remains illuminated until the Extinguishing System is reset.

3.18.6. GAS RELEASED SIGNAL ACTIVE

This is a red LED which is normally off. It is illuminated steady when the Gas Released output is active.

3.18.7. EMERGENCY ABORT ACTIVE

This is a yellow LED that is normally OFF. It indicates that the release of extinguishing gas has been aborted. The LED pulses if a fault occurs on the Abort input when the Extinguishing System is not in the pre-activated or activated conditions (a separate fault LED is also provided on the control board). The pulsed indication is non-latching and clears when the fault clears. The LED is illuminated steady If the Abort input is activated (at any time), or a fault occurs on the input during the pre-activated or activated conditions. The indication is latching and must be manually reset via the Extinguishing Reset button.

3.18.8. EMERGENCY HOLD ACTIVE

This is a yellow LED that is normally OFF. It indicates that the pre-discharge delay timer has been reset & held (therefore the release of the extinguishing gas has been suspended). The LED pulses if the Hold input is active when the pre-discharge delay timer is not running. The LED is illuminated steady if the Hold input is activated or a fault occurs on the input during the pre-discharge delay timer running. The pulsed & steady indications are non-latching and clear when the input clears.

3.18.9. CIRCUIT FAULT

This is a yellow LED that is normally OFF. It pulses to indicate that one of the circuits related to the Extinguishing system has an open or short circuit fault. A separate LED on the control board inside the panel will indicate which circuit is in fault.

3.18.10. GAS LOW

This is a yellow LED which is normally OFF. It pulses while the Gas Low input is active, clearing when the input is cleared.

3.18.11. GAS TRAPPED IN MANIFOLD

This is a yellow LED which is normally OFF. It pulses while the Gas Trapped input is active, clearing when the input is cleared.

3.18.12. ISOLATION VALVE ABNORMAL

This is a yellow LED which is normally OFF. It pulses while the Isolation Valve monitors an abnormal value (nominally 10k load), to indicate valve stuck between open & closed, clearing when the input is cleared.

3.18.13. ISOLATION VALVE CLOSED

This is a yellow LED which is normally OFF. It pulses while the Isolation Valve monitors a Closed value (nominally 680R load), clearing when the input is cleared.

3.18.14. MANUAL RELEASE FAULT/DISABLED

This is a yellow LED which is normally OFF. It pulses if the Manual Release zone input is in fault or the internal circuit to the door mounted Manual Release is in fault, clearing when the fault is cleared. A separate fault LED for each circuit is also illuminated on the internal control board. The Manual Release Fault/Disabled LED is illuminated steady when the Manual Release facility is disabled.

3.18.15. EXTINGUISHING DISABLED

This is a yellow LED which is normally OFF. It is illuminated steady when the Actuators are disabled. [Note: When the actuators are disabled the Extinguishing Sounder circuit is automatically disabled].

3.18.16. GAS RELEASED SIGNAL DISABLED

This is a yellow LED which is normally OFF. It is illuminated steady when the Gas Released Signal output is disabled.

3.18.17. SHUTDOWN OUTPUTS DISABLED

This is a yellow LED which is normally OFF. It is illuminated steady when the shutdown outputs are disabled. [All three 1st Stage, 2nd Stage & 3rd Stage shutdown outputs are disable together].

3.18.18. SECONDS TO DISCHARGE

This is a 2-digit numeric display. It is normally blank. When the pre-discharge timer is running, the remaining seconds left to discharge are displayed.

In CONFIG SLU mode, the 2-digit display allows the SLU type codes to be programmed into the panel (see section 4.2.3).

3.19. Display Board - User Controls

The Display Board provides user controls via buttons behind the membrane of the display board.

All buttons except for TEST (for Test Display) are disabled until the ACCESS CONTROLS key-switch is rotated to the ON position.

The panel acknowledges a button press by sounding the internal buzzer briefly.

The following controls are available:

3.19.1. SILENCE ALARMS

This button silences the general sounder circuits and/or silences the extinguishing sounder circuit when possible. Silencing of the extinguishing sounder circuit is inhibited until the panel enters the Gas Released condition or the Abort input is activated.

The attached yellow LED is normally OFF. It pulses when it is possible to silence any of the sounder circuits and is illuminated steady to indicate silenceable sounder circuits have been silenced.

3.19.2. RESOUND ALARMS

This button allows previously silenced alarm circuits to be resounded.

3.19.3. FIRE RESET

This button controls the resetting of fault and fire conditions on the Fire Alarm section of the panel. Faults common to the Fire section & the Extinguishing section can also be reset with this button.

3.19.4. EXTINGUISHING RESET

This button controls the resetting of fault and active conditions on the Extinguishing section of the panel. Faults common to the Fire section & the Extinguishing section can also be reset with this button. The resetting of the Extinguishing system can be inhibited up to 30 minutes once the extinguishing system has been activated and the accompanying yellow LED is illuminated steady to indicate that the Extinguishing System Reset is inhibited.

3.19.5. SILENCE BUZZER

This button silences the internal buzzer during any fault or alarm condition. The accompanying yellow LED is illuminated steady to indicate that the buzzer has been silenced. Any new fault or alarm will restart the buzzer and clear the LED.

3.19.6. AUTO & MANUAL / MANUAL ONLY

This button toggles the panel status between (Automatic & Manual) and (Manual Only) modes. If any Field Auto/Manual switch is in the Manual Only position, then this button has no effect (the Manual Only LED will be flashing).

3.19.7. SELECT ON/OFF

This button toggles the Circuit Select Cursor On and OFF. See section 4.2 for more details.

3.19.8. ENABLE

This button has no function unless the Circuit Select Cursor is ON. Depending on the current mode, operation of the button can re-enable a

previously disabled circuit, set a zone for intrinsically safe operation or move the cursor between SLU number and SLU type code digits. See section 4.2 for details.

3.19.9. DISABLE

This button has no function unless the Circuit Select Cursor is ON. Depending on the current mode, operation of the button can disable a circuit or clear a zone from intrinsically safe operation. See section 4.2 for details.

3.19.10. TEST

When the Circuit Select Cursor is OFF this button operates the Test Display feature, sounding the internal buzzer and illuminating all the LEDs on the Display and internal control board for five seconds. When the Circuit Select Cursor is ON, depending on the current mode, operation of the button can place the selected circuit into test mode. See section 4.2 for details.

NOTE: Important safety feature:

When either zone 1 or zone 2 is placed into the Test mode, the panel will automatically set both zone 1 & zone 2 into test mode (see Table 1). The panel display will show that BOTH zone 1 & 2 are in the Test mode. The Test mode for zones 1 & 2 is linked because the zones are usually used as coincidence detection zones covering the same area. Testing detectors on either zone 1 or zone 2 could inadvertently activate detectors on the other zone.

The clearing of the Test mode is not linked, i.e. each zone is individually removed from the TEST mode. This allows the engineer to test each zone individually if desired (as required by EN54-2:1997 clause 10.1 (c)).

3.19.11. SCROLL

This button has no function unless the Circuit Select Cursor is ON. Depending on the current mode, operation of the button will move the flashing cursor through the available circuit LEDs or, in SLU CONFIGURATION mode, will change either the SLU number digit or the SLU TYPE CODE digit to the next value. See section 4.2 for details.

4. Panel Operation

4.1. Circuit Configuration Options

Table 1 lists the available operating modes for configurable circuits:

Table 1 – Circuit Modes

Circuit	Disabled	Test Mode	Intrinsically Safe
Zone 1	✓	**See Note 1**	✓
Zone 2	✓		✓
Auxiliary Zone	✓	✓	✓
Field Manual Release	**Group Operation**	**N/A**	✓
Panel Manual Release		**N/A**	**N/A**
Sounder 1	**Group Operation**	**Group Operation**	☑
Sounder 2			☑
Extinguishing Sounder	**Group Operation**		☑
Actuator 1		**N/A**	☑
Actuator 2		**N/A**	☑
Fire Signal	✓	**N/A**	**N/A**
Fault Signal	✓	**N/A**	**N/A**
Gas Released Signal	✓	**N/A**	**N/A**
Shutdown 1	**Group Operation**	**N/A**	**N/A**
Shutdown 2		**N/A**	**N/A**
Shutdown 3		**N/A**	**N/A**

Note 1 – Zones 1 & 2 are placed into Test mode together but are cleared individually (safety feature)
N/A – Not Available
☑ – Feature available without additional configuration.

4.2. Circuit Select Cursor

The Circuit Select Cursor is a rapidly flashing fault/disablement LED for the selected circuit. The cursor flashes rapidly for 0.5 seconds then switches off for 1 second. During the OFF period, the LED will display the current status for the selected circuit (i.e. OFF if circuit is normal, ON if in Test or Disabled, pulsing if the circuit is in fault).

4.2.1. Disable, Re-enable, Test

To disable/re-enable or test any of the circuits in Table 1, the required circuit is selected by moving the Circuit Select Cursor and then pressing ENABLE, DISABLE or TEST as required. The process is as follows:

1. Press the SELECT ON/OFF button. The Select Cursor will appear on the FIRE SIGNAL fault LED.

2. Press the SCROLL button to move the cursor to the required circuit fault/disabled LED. The cursor will move in sequence through the relevant circuits and will then return to the FIRE SIGNAL fault LED.
3. Press ENABLE to return a circuit to normal operation, press DISABLE a circuit, press TEST to place a circuit into Test mode.
4. Repeat steps 2 & 3 for any additional circuits.
5. Press SELECT ON/OFF to switch off the cursor (the cursor is automatically switched off if no buttons are pressed for 60 seconds).

NOTE: Any circuits in Disabled or Test modes are cleared to the normal mode after power to the panel is lost.

4.2.2. Configure I.S. Zones

To configure circuits to I.S. operation the required circuit is selected by moving the Circuit Select Cursor and then pressing ENABLE or DISABLE as required (ENABLE=I.S., DISABLE=Normal). The process is as follows:

1. Move the CONFIG I.S. INPUTS DIL switch on the control board to the ON position. The CONFIG ON LED on the control board will illuminate, the buzzer will sound, the SYSTEM FAULT LED will illuminate and the SELECT ON/OFF LED will pulse. The fault/disabled LEDs for any circuits already set to I.S. mode will illuminate.
2. Press the SELECT ON/OFF button. The Select Cursor will appear on the ZONE 1 fault LED and the buzzer will silence
3. Press the SCROLL button to move the cursor to the required circuit fault/disabled LED. The cursor will move in sequence through the relevant circuits and will then return to the ZONE 1 fault LED.
4. Press the ENABLE or DISABLE button as required (to ENABLE I.S. or DISABLE I.S.).
5. Repeat steps 3 & 4 for any additional circuits.
6. Press SELECT ON/OFF to switch off the cursor (the cursor is automatically switched off if no buttons are pressed for 60 seconds).
7. Move the CONFIG I.S. INPUTS DIL switch on the control board to the OFF position.

NOTE: The I.S. configuration status is stored in EEPROM and is not lost when power to the panel is lost.

WARNING: The use of capacitors on intrinsically safe zones is dangerous and carries a risk of explosion.

4.2.3. Configure SLU (Status Lamp Units)

If SLUs are used with the panel, the panel needs to know the type of SLU connected and the address of the SLU. The configuration process is as follows:

1. Move the CONFIG SLU DIL switch on the control board to the ON position. The CONFIG ON LED on the control board will illuminate, the buzzer will sound, the SYSTEM FAULT LED will illuminate and the SELECT ON/OFF LED will pulse. The two-digit display for SECONDS TO DISCHARGE will show SLU address 1 for the first digit and the type code of that SLU on the second digit:

   10 = SLU address 1, set to Type code 0 (no SLU with address 1)

   11 = SLU address 1, set to Type code 1

   12 = SLU address 1, set to Type code 2

   13 = SLU address 1, set to Type code 3

   14 = SLU address 1, set to Type code 4

   Note: If a SLU is configured to use the panel circuits for switch monitoring, the SLU will automatically be configured as an indication only unit. The panel must therefore be configured for a type 1 SLU at the corresponding address.
2. Press the SELECT ON/OFF button. The first digit will pulse (SLU address) and the buzzer will silence, indicating that the SLU edit mode is active.
3. Press the SCROLL button to change the SLU address value. The second digit will show the Type code set for the selected address. The SLU address digit will change in sequence: 1 2 3 4 5 6 7 and then back to 1.
4. When the first digit displays the address of the SLU to be configured, press the ENABLE button. The SLU address digit will go steady and the Type Code digit will flash.
5. Press the SCROLL button to change the Type Code to the desired value, valid values: 0 1 2 3 4. The configuration is stored immediately in EEPROM.
6. Press ENABLE to switch between flashing the first & second digits (address change or type code change).
7. Press SELECT ON/OFF to switch off the edit mode (the edit mode is automatically switched off if no buttons are pressed for 60 seconds).
8. Move the CONFIG SLU DIL switch on the control board to the OFF position.

NOTE: The SLU configuration is stored in EEPROM and is retained when the panel has no power.

4.3. Panel Quiescent State

The panel will be in the quiescent state when the POWER SUPPLY ON LED is on steady, either the AUTOMATIC & MANUAL LED or the MANUAL ONLY LED is on steady and no other indications are present on the display board or the control board.

4.4. Auxiliary Fire Condition

If a fire condition is detected on the Auxiliary zone, the following occurs:

a. The FIRE LEDs pulse
b. The AUX ZONE FIRE LED pulses
c. The SILENCE ALARMS LED pulses
d. The FIRE SIGNAL output operates and the red FIRE SIGNAL LED operates
e. The AUX ZONE FIRE output operates
f. Sounder circuits 1 & 2 operate

In this state, the buzzer can be silenced, both sounder circuits can be silenced (and re-sounded if necessary) and the fire condition can be reset by operation of the FIRE RESET button.

4.5. Single Extinguishing Zone Fire Condition

4.5.1. MANUAL ONLY MODE

If a fire condition is detected on either zone 1 or zone 2 while the panel is in the MANUAL ONLY mode, the following occurs:

a. The FIRE LEDs pulse
b. The ZONE 1 FIRE or ZONE 2 FIRE LED pulses
c. The SILENCE ALARMS LED pulses
d. The FIRE SIGNAL output operates and the red FIRE SIGNAL LED operates
e. The ZONE 1 FIRE or ZONE 2 FIRE output operates
f. Sounder circuits 1 & 2 operate

In this state, the buzzer can be silenced, both sounder circuits can be silenced (and re-sounded if necessary) and the fire condition can be reset by operation of the FIRE RESET button.

4.5.2. AUTOMATIC & MANUAL MODE

If a fire condition is detected on either zone 1 or zone 2 while the panel is in the AUTOMATIC & MANUAL mode, the following occurs:

a. The FIRE LEDs pulse
b. The ZONE 1 FIRE or ZONE 2 FIRE LED pulses
c. The SILENCE ALARMS LED pulses
d. The FIRE SIGNAL output operates and the red FIRE SIGNAL LED operates
e. The ZONE 1 FIRE or ZONE 2 FIRE output operates
f. Sounder circuits 1 & 2 operate
g. The SYSTEM ACTIVATED LED pulses (pre-activated condition)
h. The 1st Stage Shutdown output operates

In this state, the buzzer can be silenced, both sounder circuits can be silenced (and re-sounded if necessary), the fire condition can be reset by operation of the FIRE RESET button and the extinguishing pre-activated condition can be reset by operation of the EXTINGUISHING SYSTEM RESET button.

4.6. Two Extinguishing Zones Fire Condition

4.6.1. MANUAL ONLY MODE

If a fire condition is detected on both zone 1 and zone 2 while the panel is in the MANUAL ONLY mode, the following occurs:

a. The FIRE LEDs pulse
b. The ZONE 1 FIRE and ZONE 2 FIRE LEDs pulse
c. The SILENCE ALARMS LED pulses
d. The FIRE SIGNAL output operates and the red FIRE SIGNAL LED operates
e. The ZONE 1 FIRE & ZONE 2 FIRE outputs operate
f. Sounder circuits 1 & 2 operate

In this state, the buzzer can be silenced, both sounder circuits can be silenced (and re-sounded if necessary) and the fire condition can be reset by operation of the FIRE RESET button.

4.6.2. AUTOMATIC & MANUAL MODE

If a fire condition is detected on both zone 1 and zone 2 while the panel is in the AUTOMATIC & MANUAL mode, the following occurs:

a. The FIRE LEDs pulse
b. The ZONE 1 FIRE and ZONE 2 FIRE LEDs pulse
c. The SILENCE ALARMS LED pulses
d. The FIRE SIGNAL output operates and the red FIRE SIGNAL LED operates
e. The ZONE 1 FIRE & ZONE 2 FIRE outputs operate
f. Sounder circuits 1 & 2 operate
g. The SYSTEM ACTIVATED LED illuminates steady (activated condition)
h. The 1st Stage Shutdown & 2nd Stage Shutdown outputs operate
i. The pre-discharge delay timer starts
j. The Extinguishing System Reset Inhibit timer starts and the INHIBITED LED illuminates.
k. The Extinguishing Sounder circuit pulses 1 second on, 1 second off.

In this state, the buzzer can be silenced, only sounder circuits 1 & 2 can be silenced (and re-sounded if necessary), the fire condition can be reset by operation of the FIRE RESET button.

4.7. Manual Release Condition

The Manual Release facility is available in the AUTOMATIC & MANUAL mode and in the MANUAL ONLY mode. When Manual Release is initiated the following occurs:

a. MANUAL RELEASE LED pulses
b. The MANUAL RELEASE output operates
c. The SYSTEM ACTIVATED LED illuminates steady (activated condition)
d. The 1st Stage Shutdown & 2nd Stage Shutdown outputs operate
e. The pre-discharge delay timer starts
f. The Extinguishing System Reset Inhibit timer starts and the INHIBITED LED illuminates.
g. The Extinguishing Sounder circuit pulses 1 second on, 1 second off.

In this state, the buzzer can be silenced.

4.8. Activated Condition

The activated condition normally occurs when the Manual Release is activated (see section 4.7) or when zones 1 & 2 register a fire condition and the panel is in the Automatic & Manual mode (see section 4.6.2). During this condition:

a. The 1st Stage Shutdown & 2nd Stage Shutdown outputs operate
b. The pre-discharge delay timer starts and the time to discharge is counted down on the Seconds To Discharge display.
c. The Extinguishing System Reset Inhibit timer starts and the INHIBITED LED illuminates (if configured to a non-zero value)
d. The Extinguishing Sounder circuit pulses 1 second on, 1 second off.

The Extinguishing Sounders cannot be silenced.

The Extinguishing System cannot be reset while the Reset Inhibit timer is active (up to 30 minutes).

When the pre-discharge delay timer ends:

a. The SECONDS TO DISCHARGE display clears
b. The 3rd Stage Shutdown output operates
c. The actuator circuits operate
d. The Extinguishing Sounder circuit pulses 1 second on, 1 second off.

When the Gas Released input is activated (or when the actuator circuits are operated and the NO DISCHARGE PRESSURE SWITCH DIL switch is in the ON position):

a. The Gas Released Signal output operates
b. The GAS RELEASED LED & GAS RELEASED SIGNAL ACTIVE LED operate
c. The SILENCE ALARMS LED pulses
d. The Extinguishing Sounder circuit operates continuously.

4.8.1. Emergency Hold Operation

Operation of an Emergency Hold switch while the pre-discharge delay timer is running will stop the pre-discharge delay timer and reset it to the configured value. The Extinguishing Sounder circuit will change to pulsing 1 second on, 5 seconds off. The timer will restart on release of the Emergency Hold switch & the Extinguishing Sounder circuit will return to pulsing 1 second on, 1 second off. The Hold output will operate while the Hold switch is operated.

4.8.2. Emergency Abort Operation

Operation of an Emergency Abort switch (or a fault on the Emergency Abort input) will abort the extinguishant release. The pre-discharge delay timer will be cancelled, the Extinguishing System Reset Inhibit will be cancelled, the actuator circuits will be de-energised, the Extinguishing Sounder circuit will be silenced & the Abort output will operate.

The Abort condition will remain until the Extinguishing System is reset.

5. Technical Specification

Mains supply voltage:
230VAC [+10% -15%].

Mains supply frequency:
50/60Hz.

Power supply output voltage:
19.0-28.3V, ripple 0.7V maximum

Maximum power supply output:
5A

Alarm current (Mains failed):
160mA
+ 20mA to 50mA for each zone in alarm
+ Ancillary equipment current
+ Alarm circuit current
+ Solenoid circuit current

Mains Failed current:
60mA + Ancillary equipment current

Integral charger output, Quiescent:
5A, minus mains failed current

Integral charger output, Alarm:
5A, minus Alarm current

Maximum Auxiliary 24VDC supply:
1.0A

Alarm circuit rating:
3 at 0.5A each (electronically fused)

Actuator circuit rating:
2 at 1A each (electronically fused)

Internal Battery size:
2 x 12Ah Sealed lead acid

Enclosure Dimensions (mm):
370 high x 325 wide x 125 deep

Weight (excluding batteries):
4.85kg.

Cable Size Accepted by Terminals:
1.0mm to 2.5mm CSA.
(Cross Sectional Area)

Maximum Detectors per Zone:
32 – dependant on type & EOL monitoring device
(not allowed on Manual Release Zone)

Maximum Call Points Per Zone:
No Limit
(not allowed on zones 1 & 2)

The charger output is designed for charging Powersonic Valve Regulated Sealed Lead-Acid batteries, which are characterised by a reducing charge current when charged from a constant potential source. It **will not** provide the maximum charging current when the other power supply outputs are fully loaded. The panel requires two 12V batteries connected in series to produce 24V.

CONNECTING ONLY ONE 12 VOLT BATTERY OR INCORRECT CONNECTION OF THE BATTERIES WILL PERMANENTLY DAMAGE THE PANEL AND THE BATTERY.

The battery charger circuit is temperature compensated and relies on a Thermistor mounted near the batteries to ensure that the correct charging voltage is maintained. The Thermistor type has been chosen to fit the profile of the Powersonic VRLA batteries. Use of batteries by another manufacturer is **not** recommended.

WARNING:
A fuse protects the internal power supply; always replace this with the correct type and rating:

T5AH250V
(20mm fuse, 5A, HBC, Anti-surge, approved to BS EN 60127 or equivalent.)

6. Standby Battery Requirements

6.1. Battery Capacity Calculation

The usual requirement for standby batteries is 24 Hours standby, plus 30 Minutes in Alarm.

Use the following as a guideline when calculating your requirements.

24 Hours Standby

Mains Failed current (A)	X	Standby Time (H)	=	Battery Capacity Required (Ah)

Mains Failed current is 0.060A plus ancillary equipment e.g. if a Status Indicator draws 0.030A then the total Mains Failed current is 0.090A.
Therefore over 24 hours the battery requirement is:

0.090 X 24 = 2.16Ah

30 Minutes Alarm

Alarm Current (A)	X	Alarm Time (H)	X	De-rating Factor (1.5)	=	Battery Capacity Required (Ah)

Alarm current is 0.160A plus the detector current plus alarm and solenoid current plus ancillary equipment e.g. if one detector is in alarm and draws 0.030A, and the alarm load is 1.0A, and the actuator load is 1.0A and a Status Indicator draws 0.040A then the total Alarm current is 2.23A.
Therefore over 30 Minutes the battery requirement is:

(**2.23 X 0.5) x 1.5 = 1.67Ah**.

Therefore the total Battery requirement is:

2.16Ah + 1.67Ah = 3.83Ah

Use batteries with a rating of at least **25% more** than the capacity required. This is to allow for deterioration of the batteries during use. So the minimum battery capacity required in this example is:

1.25 x 3.83 = 4.79Ah

Note that the enclosure will only accommodate two 12V batteries up to 12Ah capacity. Larger sized batteries fitted in a separate enclosure are not permitted.

6.2. Battery Replacement

The useful life of the standby batteries in this panel is three years. The batteries must be replaced after this time. To ensure this, when first installed, the battery should be clearly labelled with the date of installation and scheduled replacement date.

6.3. Battery Charging

The battery charger voltage is set during manufacturing and should not require adjustment. The output voltage can be verified by measuring the voltage across the battery terminals on the internal control board **with the batteries connected**. The battery charger output should be 27.10V +/- 0.05V @ 25°C (Thermistor value 15k.)
If the charger voltage requires adjustment, use an insulated trimming tool to adjust the potentiometer SVR1 on the Power Supply (see PSU layout diagram in Figure 6 for location). See Table 2 for recommended charge voltages.

Figure 6 – Power Supply Connection Details

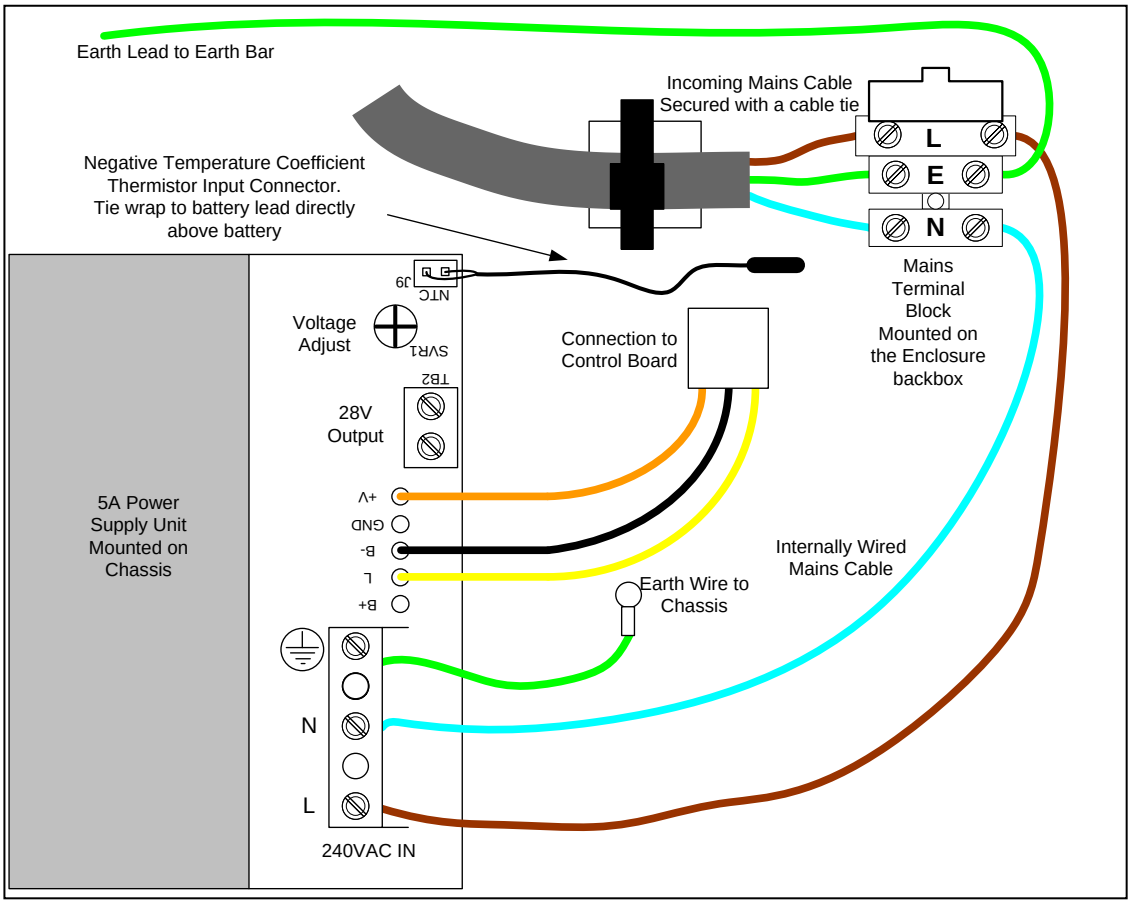

Table 2 – Float Charge Voltages for Powersonic VRLA batteries

Ambient Temperature	Charger Set voltage	Float Charge Voltage (2x12V Batteries in series)
-10°C (14°F)	28.32 – 28.42V	27.84 – 28.44V
0°C (32°F)	27.82 – 27.92V	27.60 – 28.20V
+10°C (50°F)	27.45 – 27.55V	27.36 – 27.96V
+20°C (68°F)	27.20 – 27.30V	27.12 – 27.72V
+25°C (77°F)	27.10 – 27.20V	27.00 – 27.60V
+30°C (86°F)	27.03 – 27.13V	26.88 – 27.48V
+40°C (104°F)	26.91 – 27.01V	26.64 – 27.24V
+50°C (122°F)	26.84 – 26.94V	26.40 – 27.00V

7. Detector Compatibility

The panel will operate with the following types of devices:

Manufacturer	Part no.	Description	Max. per zone (** See notes)
Apollo	53541-151	Series 30 ionisation detector	32
	53531-221	Series 30 Grade 1 heat detector	32
	45681-007	Series 20/30 mounting base	-
	55000-200	Series 60 ionisation detector	32
	55000-210	Series 60 integrating ion detector	32
	55000-100	Series 60 Grade 1 heat detector	32
	55000-101	Series 60 Grade 2 heat detector	32
	55000-102	Series 60 Grade 3 heat detector	32
	55000-103	Series 60 Range 1 heat detector	32
	55000-104	Series 60 Range 2 heat detector	32
	55000-300	Series 60 optical detector	32
	55000-380	Series 60 optical/heat detector	32
	45681-200	Series 60 mounting base	32
	55000-217	Series 65 ionisation detector	32
	55000-317	Series 65 Optical detector	32
	55000-122	Series 65 heat detector A1R	32
	55000-125	Series 65 heat detector BR	32
	55000-132	Series 65 heat detector CR	32
	55000-137	Series 65 heat detector CS	32
	55000-212	Series 60 IS ionisation detector	10
	55000-213	Series 60 IS integrating ionisation detector	10
	55000-110	Series 60 IS grade 1 heat detector	10
	55000-111	Series 60 IS grade 2 heat detector	10
	55000-112	Series 60 IS grade 3 heat detector	10
	55000-113	Series 60 IS range 1 heat detector	10
	55000-114	Series 60 IS range 2 heat detector	10
	45681-207	Series 60 IS base	-
	ORB-HT-11001-APO	Orbis Class A1R Heat detector with SensAlert & FasTest	32
	ORB-HT-11013-APO	Orbis Class A1R Heat detector with SensAlert & FasTest & Flashing LED	32
	ORB-HT-11002-APO	Orbis Class A2S Heat detector with SensAlert & FasTest	32
	ORB-HT-11014-APO	Orbis Class A2S Heat detector with SensAlert & FasTest & Flashing LED	32
	ORB-HT-11003-APO	Orbis Class BR Heat detector with SensAlert & FasTest	32
	ORB-HT-11015-APO	Orbis Class BR Heat detector with SensAlert & FasTest & Flashing LED	32
	ORB-HT-11004-APO	Orbis Class BS Heat detector with SensAlert & FasTest	32
	ORB-HT-11016-APO	Orbis Class BS Heat detector with SensAlert & FasTest & Flashing LED	32
	ORB-HT-11005-APO	Orbis Class CR Heat detector with SensAlert & FasTest	32
	ORB-HT-11017-APO	Orbis Class CR Heat detector with SensAlert & FasTest & Flashing LED	32
	ORB-HT-11006-APO	Orbis Class CS Heat detector with SensAlert & FasTest	32
	ORB-HT-11018-APO	Orbis Class CS Heat detector with SensAlert & FasTest & Flashing LED	32
	ORB-OP-12001-APO	Orbis Optical detector with SensAlert, FasTest & DirtAlert	32
	ORB-OP-12003-APO	Orbis Optical detector with SensAlert, FasTest & DirtAlert & Flashing LED	32
	ORB-OH-13001-APO	Orbis multi-sensor detector with SensAlert, FasTest & DirtAlert	32
	ORB-OH-13003-APO	Orbis multi-sensor detector with SensAlert, FasTest & DirtAlert & Flashing LED	32
	OB: ORB-MB-00001-APO	TimeSaver Base	-
	OL: ORB-MB-00002-APO	TimeSaver Base LX (without continuity checking link)	-
	OD: ORB-MB-00003-APO	TimeSaver Diode Base	-
	DX: OLX-DB-00007-APO	TimeSaver Diode Base LX (without continuity checking link)	-

Manufacturer	Part no.	Description	Max. per zone (** See notes)
	OR: ORB-RB-00004-APO	TimeSaver Relay Base	-
Hochiki	SLK-E	CD Range optical detector	32
	SIH-E	CD Range ionisation detector	32
	DFE-60E	CD Range 60 heat detector	32
	DFE-90E	CD Range 90 heat detector	32
	DCC-1EL	CD Range Grade 1 heat detector	32
	DCC-2EL	CD Range Grade 2 heat detector	32
	DCC-1REL	CD Range R1 heat detector	32
	YFB-RL\4H5	Mounting base	-
	YBK-RL/4H1	CD Range mounting base	32
	SLR-E3	CDX Range optical detector	32
	SIJ-E	CDX Range ionisation detector	32
	DFJ-AE3	CDX Range 60 heat detector	32
	DFJ-CE3	CDX Range 90 heat detector	32
	DCD-AE3	CDX Range heat detector	32
	DCD-CE3	CDX Range heat detector	32
	DCD-2E	CDX Range R1 heat detector	32
	DFG-E	Waterproof Fixed Temperature (60) Heat Detector – No Base Required	32
	YBN-R/4SK	CDX Range mounting base	-
	YBN-R4	Electronics Free Base	-
	YBO-R5	CDX range mounting base, with remote indicator, no diode	-
	YBO-5SK	CDX range mounting base, with remote indicator and diode	-
	YBN-R4	CDX range mounting base, no diode	-
	SRA-ET	Linear Reflective Smoke Beam Detector	3
	SPB-ET	Linear Smoke Beam Detector	5
	SLR-E-IS	Photoelectric Intrinsically Safe detector	25
	DCD-1E-IS	Rate of Rise intrinsically Safe Detector incorporating a 60 deg fixed temperature element	25
	YBN-R/4(I.S)	Electronics Free Base (intrinsically Safe)	-
	YBN-R/6SK	Conventional head removal base	-
	YBN-R6	Electronics free base	
	YBO-R/6R	Mounting base with relay	-
	YBO-R/6RS	Mounting base with relay and Schottky diode	-
	YBO-R/6RN	Mounting base with relay with non latch relay	-
Honeywell	TC804E-1022	Optical detector	32
	TC805E-1005	Ionisation detector	32
	TC830-1004	Heat detector	32
	14506587-005	Mounting base (Diode version)	-
Nittan	ST-I	Sensortec ionisation detector	32
	ST-P	Sensortec optical detector	32
	STB-4SDR	Sensortec diode and resistor base	-
	STB-4R	Sensortec resistor base	-
	STB-24VR	Sensortec relay base	-
	STB-4IS	Sensortec IS base	-
	EVC-I	New Evolution conventional Ionisation	32
	EVC-P	New Evolution conventional optical	32
	EVC-H-A1S	New Evolution conventional heat	32
	EVC-H-A2S	New Evolution conventional heat	32
	EVC-H-BS	New Evolution conventional heat	32
	EVC-H-CS	New Evolution conventional heat	32
	TBA	New Evolution base	-
	ST-I-IS	Intrinsically Safe Ionisation Detector	20
	NID58F	Ionisation smoke detector	20
	2KC	Optical smoke detector	20
	TCA-70-LS	Mounting base	-
	RB-3R	Mounting base	-
	NHD-G1(4T)	Grade 1 fixed temperature	32
	NHD-G2(4T)	Grade 2 fixed temperature	32

Manufacturer	Part no.	Description	Max. per zone (** See notes)
	NHD-G3(4T)	Grade 3 fixed temperature	32
	NHD-G\H1(4T)	Range 1 fixed temperature detector	32
	2KH-4T	Photo electric	32
	2IC-4T	Ionisation detector	32
	RB4	Mounting base	-
System Sensor	1151E	Ionisation detector	32
	2151E	Optical detector	32
	5451E	Grade 1 heat detector	32
	4451E	Range 1 heat detector	32
	1451E	Ionisation detector	32
	2451E	Optical detector	32
	B401RSD	Mounting base	-
	ECO 1003	Conventional optical	32
	ECO 1002	Conventional multi-sensor	32
	ECO 1005	Conventional heat RoR	32
	ECO 1005T	Conventional heat FT	32
	2351E	Conventional Optical	32
	2351TEM	Conventional multi-sensor	32
	4351E	Conventional high temp heat	32
	5351E	Conventional RoR/FT	32
Ziton	Z630-1	Optical detector	32
	Z610-1	Ionisation detector	32
	Z6BS2A	Mounting base	-
GLT	PO100	Optical Smoke Detector	32
	PI100	Ionisation Smoke Detector	32
	PHR100	Rate of Rise Heat Detector	32
	PHF100	Selectable Heat Detector	32
	PB100	Common Base	-
	PBD100	Common Diode Base	-
	PBR100	24V Relay Base	-
ADT/ Tyco/ Thorn	MF601	Ionisation Detector	32
	MR601	Optical Detector	32
	MR601T	High Performance Optical Detector	32
	MD601	ROR Heat Detector	32
	MD611	60 Deg C Heat Detector	32
	MU601	Carbon Monoxide Detector	32
	CP230	Manual call point	32
	CP200	Manual call point	32
	CP210	MANUAL CALLPOINT	32
Tyco Non Branded	H600	Fixed Temperature heat detector	32
	H601	Fixed Temperature heat detector	32
	H602	Fixed Temperature heat detector	32
	H604	Fixed Temperature heat detector	32
	H900	Fixed Temperature heat detector	32
	H902	Fixed Temperature heat detector	32
	H904	Fixed Temperature heat detector	32
	M300EX	Detector base I.S.	-
	MUBEX	MUBEX base	-
	M600D	Series 600 Diode Base	-
	MC600	Series 600 Relay Base	-
	MF301	Ionisation Detector	24
	MF301EX	Ionisation Detector (IS)	24
	MR301	Optical Detector	24
	MR301EX	Optical Detector (IS)	24
	MD301	ROR Heat Detector Grade 1	24
	MD301EX	ROR Heat Detector (IS) Grade 1	24
	MD303EX	ROR Heat Detector (IS) Grade 3	24
	MD305EX	Range 2 Heat Detector (IS)	24
	M300	Conventional Base	-

Manufacturer	Part no.	Description	Max. per zone (** See notes)
	601F	Conventional Solar Blind Flame Detector	5
	601FEX	Conventional IS Solar Blind Flame Detector	5
	MD631EX	CONV F/T IS HEAT DETECTOR	24
	601CH	Conv Enhanced Carbon Monoxide	17
	601H-R	Conv Heat (Rate of Rise) Detector	17
	601H-F	Conv Heat (F/T 60 Deg C) Detector	17
	601P	Conv Optical Smoke Detector	17
	601PH	Conv High Perform Optical Smoke	17
	5B BASE	5” universal base	-
	5BI BASE	5” isolator base	-
TYCO	MU601EX	CO detector (IS)	24
	MD611EX	Heat detector (IS)	24
	MD601EX	Heat detector (IS)	24
	MR601TEX	High performance optical detector (IS)	24
	MDU601EX	Combined CO and heat detector (IS)	24
	MF601EX	Ionisation detector (IS)	24
THORN	S111	I/R flame detector (IS)	12
	S112	I/R flame detector (IS)	12
	S121	I/R flame detector (IS)	12
	S131	I/R flame detector (IS)	12
	S161	I/R flame detector (IS)	12
	S231I+	Triple I/R flame detector (IS)	3
	S231F+	Triple I/R flame detector	3
	MS302EX	Flame detector (IS)	12
	CP220EX	IS Manual Call Point	32
	M600	Universal Base	-
	MB600	Sounder Base	-
	601SB	SOUNDER BASE	-
	601SBD	DIODE SOUNDER BASE	-
	S232F+	TRIPLE I/R FLAME DETECTOR	3
	CP260M	Marine call point	-
	MB600D	Sounder Base with Diode	-
Thorn/Grinnell	600RBA	Relay Base (UL)	-
	612H	ROR heat detector	17
	612I	Ionisation detector	17
	612P	Optical detector	17
	612HP	High performance optical detector	17
	622H	60 deg c heat detector	17
	632H	90 deg c heat detector	17
	4” BASE	Series 600 base	-
	6” BASE	Series 600 base	-
Zettler/thorn/ Wormald	MR613T	High performance optical detector	24
	MR613	Optical detector	24
	MD613	ROR heat detector	24
	MF613	90 deg c heat detector	24
	MD623	60 deg c heat detector	24
	MU601	Carbon Monoxide Detector	24
KAC	WR2072-470	Manual call point	32
	WR2061-120-470	Manual call point	32
Fulleon	CX	Manual call point	32
	CXL	Manual call point	32

NOTES:

1. Detector quantities are based on the use of a 22uF capacitor as the end-of-line device, except for intrinsically safe devices, in which case the EOL is a 10K resistor.
2. If the DIL switch option '3K9 EOL' is selected, then the maximum number of detectors per zone will be reduced. In this case the maximum detector current in standby should not exceed 2.3mA. As a general rule the quantities shown above should be halved.
3. Detector models not listed above may be compatible if electrically similar to the above devices. Consult your supplier for advice.
4. All break glass units (call points) must have a resistor fitted to them to produce an alarm condition on the panel. Any value between 100 Ohm and 680 Ohm is acceptable. Please check with your supplier if you are not sure.
5. It is not permitted to connect more than 32 detectors to any zone. (The Manual Release circuit is not a detection zone and therefore should only have MCPs fitted).

8. Panel Installation

The control panel must be installed by suitably qualified technicians familiar with the installation of fire detection & extinguishing systems. In addition, it is recommended to refer to the following information:

1. Current edition of the IEE wiring regulations.
2. Current edition of BS5839-1 or the installation standards for the relevant country.
3. Any site-specific requirements.
4. Any field device installation instructions.
5. Any data sheet provided for the installation of Intrinsically Safe devices.

WARNING: ***Read this section completely before commencing installation.***

Prior to commencing installation of the control panel, ensure that adequate precautions are taken to prevent damage to the sensitive electronic components on the control board due to electrostatic discharge. You should discharge any static electricity you may have accumulated by touching a convenient earthed object such as an unpainted copper radiator pipe. You should repeat the process at regular intervals during the installation process, especially if you are required to walk over carpets.

The panel must be located in a clean, dry position, which is not subject to shock or vibration and at least 2 metres away from pager systems or any other radio transmitting equipment. The operating temperature range is -5ºC to +40ºC; maximum humidity is 95%.

8.1. Important Safety Considerations For Batteries

DANGER: Batteries are electrically live at all times, take great care never to short circuit the battery terminals.

WARNING: Batteries are often heavy; take great care when lifting and transporting batteries. For weights above 24 kilos, lifting aids should be used.

DANGER: Do NOT attempt to remove the battery lid or tamper with the internal workings of the battery. Electrolyte is a highly corrosive substance, and presents significant danger to yourself and to anything else it touches. In case of accidental skin or eye contact, flush the affected area with plenty of clean, fresh water and seek immediate medical attention.

Valve Regulated Lead Acid (VRLA) batteries are "low maintenance", requiring no electrolyte top-up or measurement of specific gravity.

WARNING: Only clean the battery case with a cloth that has been soaked or dampened with distilled water. Do not use organic solvents (such as petrol, paint thinner, benzene or mineral spirits) or other materials that can substantially weaken the case. Do not use a dry cloth as this will generate static electricity, which in turn may lead to an explosion.

WARNING: Avoid operating temperatures outside the range of -15°C/5°F to +50°C/122°F for float/standby applications.

The recommended normal operating temperature is 20°C.

HIGH TEMPERATURE will reduce battery service life. In extreme cases this can cause Thermal Runaway, resulting in high oxygen/hydrogen gas production and battery swelling. Batteries are irrecoverable from this condition and should be replaced.

LOW TEMPERATURE will prolong battery life but reduce output capacity.

DANGER:

Do not incinerate batteries. If placed in a fire, the batteries may rupture, with the potential to release hazardous gases and electrolyte. VRLA batteries contain substances harmful to the environment.

Exhausted batteries must be recycled. Return them to the battery manufacturer or take them to your Council waste disposal site for appropriate disposal.

8.2. Electrical Safety

The volt-free relay contacts provided within the panel must not be used to directly switch any voltage that exceeds 50VAC or 75VDC. (Please also refer to relay rating data).

This equipment requires a 230V AC supply. All installation work should be carried out in accordance with the recommendations of BS5839 Part 1 and the current edition of the IEE regulations by suitably qualified and trained personnel.

THIS PANEL MUST BE EARTHED
All electrically conductive parts of this installation must be bonded to the protective earth for safety.

8.3. Cable Recommendations:

All external connections (except for mains power) to the panel must be made using shielded fire resistant cable such as FP200. The shield of each cable must be connected to the earth bar inside the enclosure. The maximum cable core size permitted is 2.5mm^2 CSA (cross sectional area). The total end-to-end resistance of any core should not exceed 20 Ohms.

In addition, connection to the Status Lamp Units (SLUs) should be made via data-grade fire resistant cable. The total cable length for all SLUs should not exceed 2000 metres.

CIRCUIT	Cable Cross-sectional Area	Maximum Cable Run
Zone	1.0mm	350 metres
Zone	1.5mm	600 metres
Alarm/Actuator	1.0mm	200 metres
Alarm/Actuator	1.5mm	350 metres

Mains cable compliant to BS6004, BS6500, or equivalent must be used for connection to the Power Supply. Cable up to 4mm^2 CSA may be used.

8.4. Installation Procedure

1. Unpack the Control panel. If the panel door is locked locate the panel keys (usually fixed to the top of the panel) and open the door
2. Locate the small plastic bag containing the installation spares as follows:
   (i) 22 off End of Line Resistors (10k ohms – colour code brown, black, orange, gold)
   (ii) Remote controls switch resistors:
   Sound alarms - 4k7 ohms (yellow, purple, red, gold)
   Silence alarms – 1k8 ohms (brown, grey, red, gold)
   Reset – 560 ohms (green, blue, brown, gold)
   (iii) Valve monitoring resistors:
   Valve open – 2k2 ohms (red, red, red, gold)
   Valve closed – 680 ohms (blue, grey, brown, gold)
   (iv) 3 off End of Line Capacitors (22μF)
   (v) Spare 20mm mains fuse T5AH250V
   (vi) Spare 20mm battery fuse F6.3A250V
   (vii) 2 off cable ties
   (viii) 2 off C1565 actuator suppression units
   (ix) A set of battery leads (+ve, -ve and jumper lead)
3. Disconnect the display ribbon cable from the internal control board by pulling firmly but gently on the ribbon cable connector.
4. Disconnect the Earth wire from the chassis at the top left of the chassis.
5. Remove the control panel chassis (complete with power supply & control board) from its fixings by undoing the screws located on the chassis. The bottom left & right screws need to be removed completely, the top left & right screws can just be slackened. The chassis can then be pushed upwards and removed. Rest the chassis in the bottom of the enclosure and disconnect the internal mains cables from the terminal block at the top-right of the enclosure.
6. Remove the chassis and place the complete chassis unit safely to one side. **Do not remove the control board or the power supply unit from the chassis**.
7. Place the empty enclosure against the wall, mark and fix using the single fixing hole in the upper section of the enclosure. Level the enclosure and complete the fixing operation using the remaining two fixing holes in the lower section of the enclosure**. The fixing holes are suitable for 5mm diameter screws (imperial size 10). Use stainless steel or plated screws.**
8. Gland the installation wiring into the enclosure using the cable entry knockouts provided at the top of the enclosure.
9. When all installation wiring is complete, check all the wiring to ensure that it is free from short circuits, open circuits, earth faults, crossed connections etc.
10. Connect the end of line capacitor across the terminals of the last device in each of the three zone wiring runs. The end of line capacitors are provided in the small plastic bag supplied with the panel.
11. Check that any Manual Call Points on the aux. zone are fitted with an activation resistor (in the range 100 Ohms to 680 Ohms).
12. Connect a 10k EOL resistor across the terminals of the last device on the Manual Release zone.
13. Connect a 10k EOL resistor across the terminals of the last device in each of the alarm wiring runs.
14. Connect a 10k EOL resistor across the terminals of the last device in each of the solenoid wiring runs. If you are using the C1565 monitoring and suppression board instead of the end of line resistor, then note that only one board can be used on each circuit.
15. Connect a 10k EOL resistor across the terminals of the last device for any additional monitored input or output circuits being used.
16. Place the chassis in the bottom of the enclosure and Re-connect the internal mains cables to the mains terminal block. Ensure that the Earth lead to the Earth Bar is connected to the Mains Terminal block.
17. Re-connect the Earth lead to the chassis and refit the chassis on the four mounting screws. Reconnect the display ribbon cable to the motherboard.
18. Connect 230V AC mains to the mains terminal block provided inside the enclosure, ensuring that the mains supply is isolated at the source. The mains cable must be secured inside the enclosure using a Cable Tie (see Figure 6 – Power Supply Connection Details).

NOTES

An appropriate lockable double pole disconnect device shall be provided as part of the building installation. This device must have a minimum contact gap of 3mm.

The mains supply should be protected by a 5A fuse.

Use only mains cable compliant to BS6004, BS6500, or equivalent, within the following limits:

	Cable Diameter	Conductor Diameter
Minimum Dimensions	**4.0mm**	**1.0mm (0.8mm^2)**
Maximum Dimensions	**8.0mm**	**2.25mm (4.0mm^2)**

DO NOT TURN ON THE MAINS SUPPLY TO THE CONTROL PANEL AT THIS STAGE.

Do not connect any field wiring at this time.

8.5. Commissioning Procedure

NOTES:

In order to avoid accidental operation of the solenoid valves during commissioning the solenoid valves should remain disconnected during the commissioning process. A suitable load resistor (typically 47R, 20W, providing a 0.6A load, check manufacturer's datasheet for actual current or coil resistance) should be connected in place of the solenoid to simulate the presence of the solenoid coils. The solenoid coils should be connected only at the end of the commissioning process.

The commissioning engineer should also be aware of any additional equipment connected to the panel and the consequences of the operation of that equipment during the commissioning process.

Make sure that the ACCESS CONTROLS keyswitch is in the ON position before operating any of the buttons on the display board.

ALL internal DIL switches should be in the OFF position at the start of the commissioning process detailed below.

1. Turn ON the mains supply to the panel, and observe that the control panel reacts as follows:
   a) The green Power Supply On LED illuminates (display)
   b) The yellow Manual Only LED illuminates (display)
   c) The yellow General Fault LED flashes (display)
   d) The yellow Power Supply Fault LED flashes (display)
   e) The yellow Batt/Charge Fault LED is illuminated (control board)
   f) The internal buzzer sounds (control board)
   g) The Auxiliary Fault Relay operates

   No other indications should be present at this time, if there are, identify the fault and rectify it by checking the following:
   a) That no field wiring is connected.
   b) That the EOL devices are connected correctly in the panel terminals on each monitored circuit.
2. Connect the batteries to the control board observing correct polarity. Observe (after 20 to 30 seconds) that the control panel reacts as follows:
   a) The buzzer silences and the fault indications extinguish.
   b) The Power Supply On LED remains lit.
   c) The System Automatic & Manual LED remains lit.

   Position the Thermistor in free air space directly above the batteries. Use a cable tie to secure the Thermistor to one of the battery leads.
3. Press the Test button on the display board and check that the control panel reacts as follows:
   a) All LEDs on the display board and the control board illuminate for 5 seconds.
   b) The internal buzzer sounds for 5 seconds.
4. Switch off the mains AC supply to the control panel and check that the control panel reacts as follows:
   a) The General fault LED on the display board pulses
   b) The Power Supply fault LED on the display board pulses
   c) The internal buzzer in the control board sounds
   d) The Fault Relay operates
   e) The Mains Fault LED on the control board illuminates
5. Restore the mains supply to the panel.
6. Remove the end of line device from the zone 1 terminals in the panel and connect the field cabling. After a few seconds observe that the panel returns to the quiescent condition.
7. For each detector on zone 1, remove the detector from it's base and check that after a few seconds:
   a) The appropriate yellow Zone fault LED pulses
   b) The General fault LED pulses
   c) The internal buzzer pulses
   d) The fault output operates

   Re-connect the detector and check that the panel returns to quiescent.
8. Repeat step 6 and 7 on zone 2 and the auxiliary zone.

9. Check that the zone detection circuits are monitoring the wiring for short circuits correctly. For each zone in turn, place a wire link across the end of line device and check that after a few seconds:
   a) The appropriate yellow Zone fault LED pulses
   b) The General fault LED pulses
   c) The internal buzzer pulses
   d) The fault output operates

   Remove the link and check that the panel returns to quiescent.

10. Remove the end of line device from the Manual Release Zone terminals in the panel and connect the field cabling. After a few seconds observe that the panel returns to the quiescent condition.
11. Check that the Manual Release Zone circuit is monitoring the wiring for open circuits correctly by disconnecting the End-Of-Line resistor at the end of the circuit and checking that after a few seconds:
   a) The yellow Manual Release Fault/Disabled LED pulses
   b) The General fault LED pulses
   c) The internal FIELD MR FAULT LED illuminates steady
   d) The internal buzzer pulses
   e) The fault output operates

   Re-connect the EOL resistor and check that the panel returns to quiescent.

12. Check that the Manual Release Zone circuit is monitoring the wiring for short circuits correctly by placing a wire link across the Manual Release zone end of line device and checking that after a few seconds:
   a) The yellow Manual Release Fault/Disabled LED pulses
   b) The General fault LED pulses
   c) The internal FIELD MR FAULT LED illuminates steady
   d) The internal buzzer pulses
   e) The fault output operates

   Remove the link and check that the panel returns to quiescent.

13. Remove the end of line device from the Alarm Circuit 1 terminals in the panel and connect the field cabling. After a few seconds observe that the panel returns to the quiescent condition.
14. Check that the alarm circuit is monitoring the wiring for open circuits correctly. Remove the EOL resistor from the last device on the circuit and check that after a few seconds:
   a) The Fire Sounder Fault LED for on the Display pulses
   b) The appropriate yellow alarm fault LED on the control board illuminates
   c) The General fault LED pulses
   d) The internal buzzer pulses
   e) The fault output operates

   Replace the EOL resistor & check that the panel returns to quiescent.

15. Check that the alarm circuits are monitoring the wiring for short circuits correctly. Place a wire link across the EOL resistor in the last device on the circuit and check that after a few seconds:
   a) The Fire Sounder Fault LED on the Display pulses
   b) The appropriate yellow alarm fault LED on the control board illuminates
   c) The General fault LED pulses
   d) The internal buzzer pulses
   e) The fault output operates

   Remove the link & check that the panel returns to quiescent.

16. Repeat steps 13 to 15 for alarm circuit 2 and the extinguishing alarm circuit.
17. Ensure that the Actuators are disconnected from the circuit cabling and are replaced with a suitable load as described above.
18. Remove the end of line device from the Actuator Circuit 1 terminals in the panel and connect the field cabling. After a few seconds observe that the panel returns to the quiescent condition.
19. Repeat open circuit & short circuit tests on actuator circuit 1 and check that the control panel reacts as follows:
   a) The Circuit fault & General fault LEDs pulse
   b) The appropriate Actuator Fault LED on the control board illuminates
   c) The internal buzzer pulses
   d) The fault output operates
20. Repeat Steps 18 and 19 on Actuator circuit 2.
21. Any additional monitored circuits being used should also be connected in turn and checked for correct open/short circuit fault monitoring by removing or short-circuiting the EOL resistor on each circuit and checking that the correct fault indication is given on the panel.

   Fault indications should clear once the EOL resistor is returned to normal.

22. Check that the MANUAL ONLY LED is illuminated. If not, press the AUTO & MAN / MANUAL ONLY button once so that the MANUAL ONLY LED illuminates
23. Place zones 1 & 2 into the One-Man-Test mode as follows:
   a) Press the SELECT ON/OFF button. The SELECT cursor should flash on the FIRE SIGNAL fault LED.
   b) Press the SCROLL button. The cursor should move to the ZONE 1 fault LED.

c) Press the TEST button. The ZONE 1 & ZONE 2 fault LEDs should illuminate steady (with a cursor flash on ZONE 1 fault LED). The TEST LED should also illuminate steady.
d) Press the SELECT ON/OFF button to switch off the flashing cursor, leaving the ZONE 1 & ZONE 2 fault LEDs and the TEST LED illuminated steady.

24. Activate the first detector on zone 1 and check that the control panel reacts as follows:
    a) The red ZONE 1 Fire LED illuminates steady
    b) Sounder circuits 1 & 2 operate
    c) The internal buzzer in the control panel sounds

    After four seconds the panel should automatically reset, resetting the detector and energising the RESET relay for 10 seconds.

25. Repeat step 24 above for all detectors on zone 1.

26. Repeat steps 24 and 25 for zone 2, checking that the red ZONE 2 Fire LED illuminates steady instead on the Zone 1 Fire LED.

27. Return zones 1 & 2 to normal as follows:
    a) Press the SELECT ON/OFF button. The SELECT cursor should flash on the FIRE SIGNAL fault LED.
    b) Press the SCROLL button. The cursor should move to the ZONE 1 fault LED.
    c) Press the ENABLE button. The ZONE 1 & ZONE 2 fault LEDs should clear (with a cursor flash on ZONE 1 fault LED). The TEST LED should also clear.
    d) Press the SELECT ON/OFF button to switch off the flashing cursor.

28. Place the Auxiliary Zone into the One-Man-Test mode (using the SELECT cursor as for zones 1 & 2). Activate each detector & call point in turn and check that the panel responds as in 24 above (except that the AUX ZONE Fire LED operates instead of the ZONE 1 Fire LED).

29. Return the Auxiliary Zone to normal operation.

30. Operate the panel mounted Manual Release Point and check that the panel reacts as follows:
    a) The red Manual Release Active LED pulses
    b) The red System Activated LED illuminates steady
    c) The EXTINGUISHING SOUNDER circuit pulses
    d) Actuator circuits 1 & 2 operate
    e) The internal buzzer in the control panel sounds

31. Activate the Pressure Switch input (if fitted) and check that the panel reacts as follows:
    a) The Silence Alarms LED pulses
    b) The red Manual Release Active LED pulses
    c) The red System Activated LED illuminates steady
    d) The Gas Released LED illuminates steady
    e) The Gas Released Signal Active LED illuminates steady
    f) The Gas Released Signal Relay activates
    g) The EXTINGUISHING SOUNDER circuit is steady
    h) Actuator circuits 1 & 2 remain activated
    i) The internal buzzer in the control panel sounds

32. Press the Silence Alarms button on the display board and check that the control panel reacts as follows:
    a) The Extinguishing sounders silence.
    b) The red Manual Release LED illuminates steady
    c) The Silence Alarms LED illuminates steady

33. Restore the panel mounted Manual Release point to normal. Press the EXTINGUISHING SYSTEM RESET button to reset the panel.

34. Operate the first device connected to the external Manual Release input and check that the panel reacts as in 30 above. Restore the Manual Release device to normal and press the EXTINGUISHING SYSTEM RESET button to reset the panel.

35. Repeat step 34 for all devices connected to the Manual Release input.

The primary functions of the panel have now been tested.

The Panel can now be configured for the specific requirements of the site via the internal DIL switches. Once configured, the panel functions should be tested to ensure correct configuration.

For any optional circuits in use (i.e. GAS LOW, ISOL. VALVE, GAS TRAPPED, HOLD, ABORT, REMOTE CTRLS, AUTO/MANUAL, 1st, 2nd & 3rd Stage Shutdowns) these should also be checked for open & short circuit faults, and for correct activation.

If Status Indicators are used then check that the correct indications are shown on the status indicators and any switches fitted operate correctly.

Once all Panel functions have been fully tested, the panel should be set to the AUTOMATIC & MANUAL mode and left on soak for 24 hours. DO NOT CONNECT THE SOLENOID VALVES DURING THIS PERIOD.

After the panel has been successfully soak-tested, the SOLENOID VALVES may be connected to the actuator circuits and the panel can be locked and left in a fully operational

state. Do not arm the extinguishing system without authorization from the Site's designated Responsible Person.

All authorised users must be given adequate instruction/training on the operation of the extinguishing system prior to hand-over.

9. System Maintenance

9.1. Overview

The Fire detectors & Sounders should be tested weekly and a note made in the system logbook.

1. The operation of manual call points and detectors should be carried out on a rotational basis so that all devices are checked at least once over a 3-month period.

Important:

Ensure that the extinguishing system is physically disabled by electrical or mechanical disconnection before carrying out any tests.

2. To operate a manual call point, use the Test key provided.
3. To operate a detector, use an approved Test Smoke.
4. Check the operation of auxiliary items such as door closers.
5. **Re-enable any disabled circuits after completing the tests.**

9.2. Weekly Test Routine

Operate one manual call point and one detector. These should be on separate zones and the zones should be varied each week (unless all zones are always tested).

1. Check that sounder circuits 1 & 2 operate.
2. Remove the test key from all manual call points and clear all detectors of smoke.
3. Press the Fire Reset button.
4. Operate the test lamps switch and observe that all indications operate for 5 seconds and the buzzer sounds.
5. Test one hold, one abort and one auto/manual switch (if fitted). These should be on separate SLUs and should be varied each week.
6. Check that operation of the hold switch indicates a hold condition on the SLU.
7. Check that operation of the abort switch indicates an abort condition on the SLU.
8. Check that operation of the auto/manual switch changes the panel from automatic & manual to manual only operation, as indicated at the SLU.
9. Operate test lamps on each SLU and observe that all indicators operate.
10. Enter details of the weekly test in the log book.

ENSURE THAT NO DISABLEMENTS REMAIN ON THE PANEL.

9.3. Battery Replacement

The useful life of the sealed lead acid standby batteries in this panel is three years. The batteries must be replaced after this period. In addition, the batteries should be tested annually in line with the manufacturer's recommendations and replaced if necessary. The batteries should be labelled with the date of installation.

10. PCB Layout Diagram

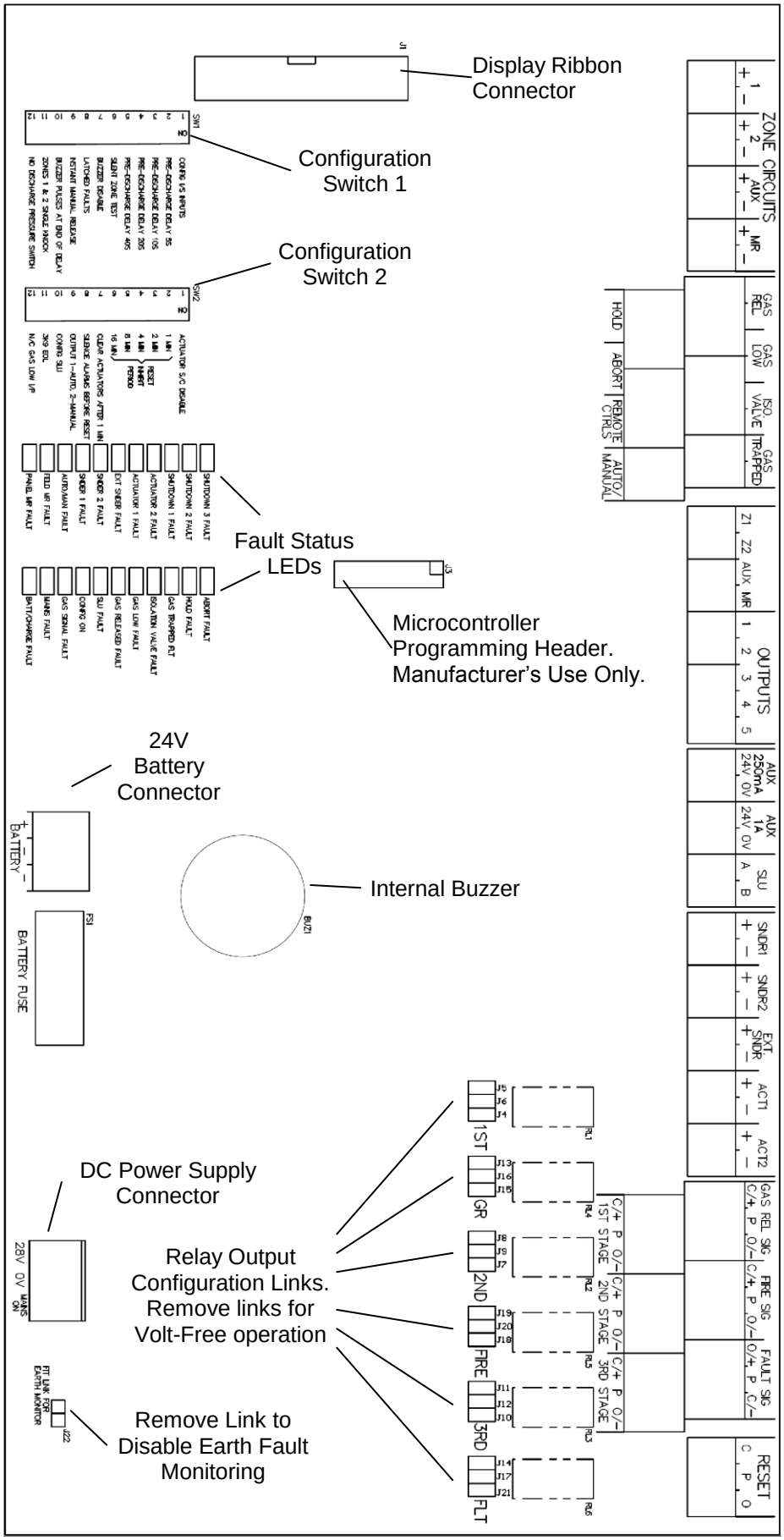

11. Panel Exploded View

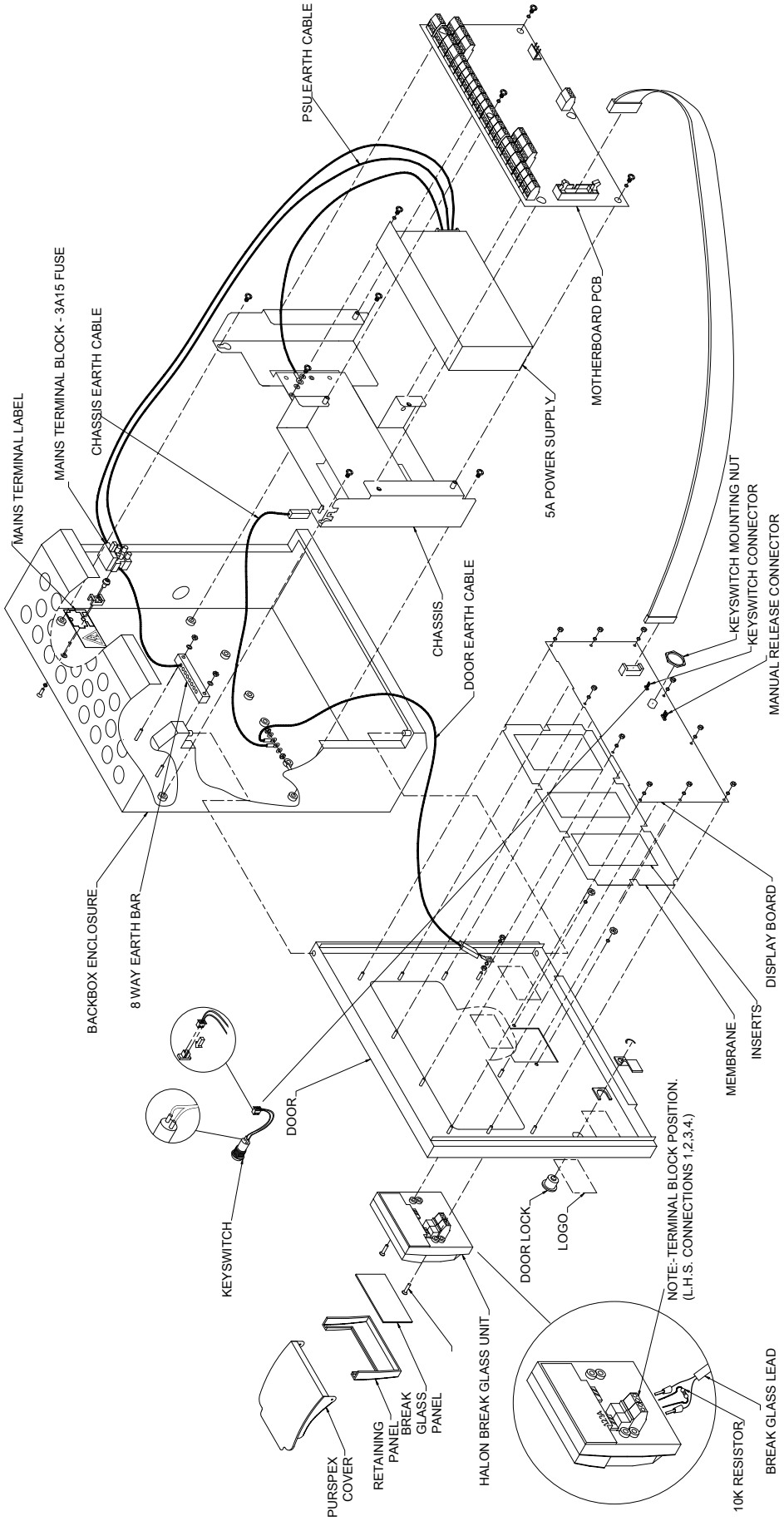

12. Connection Diagrams

12.1. Zone Circuit Connection Diagram

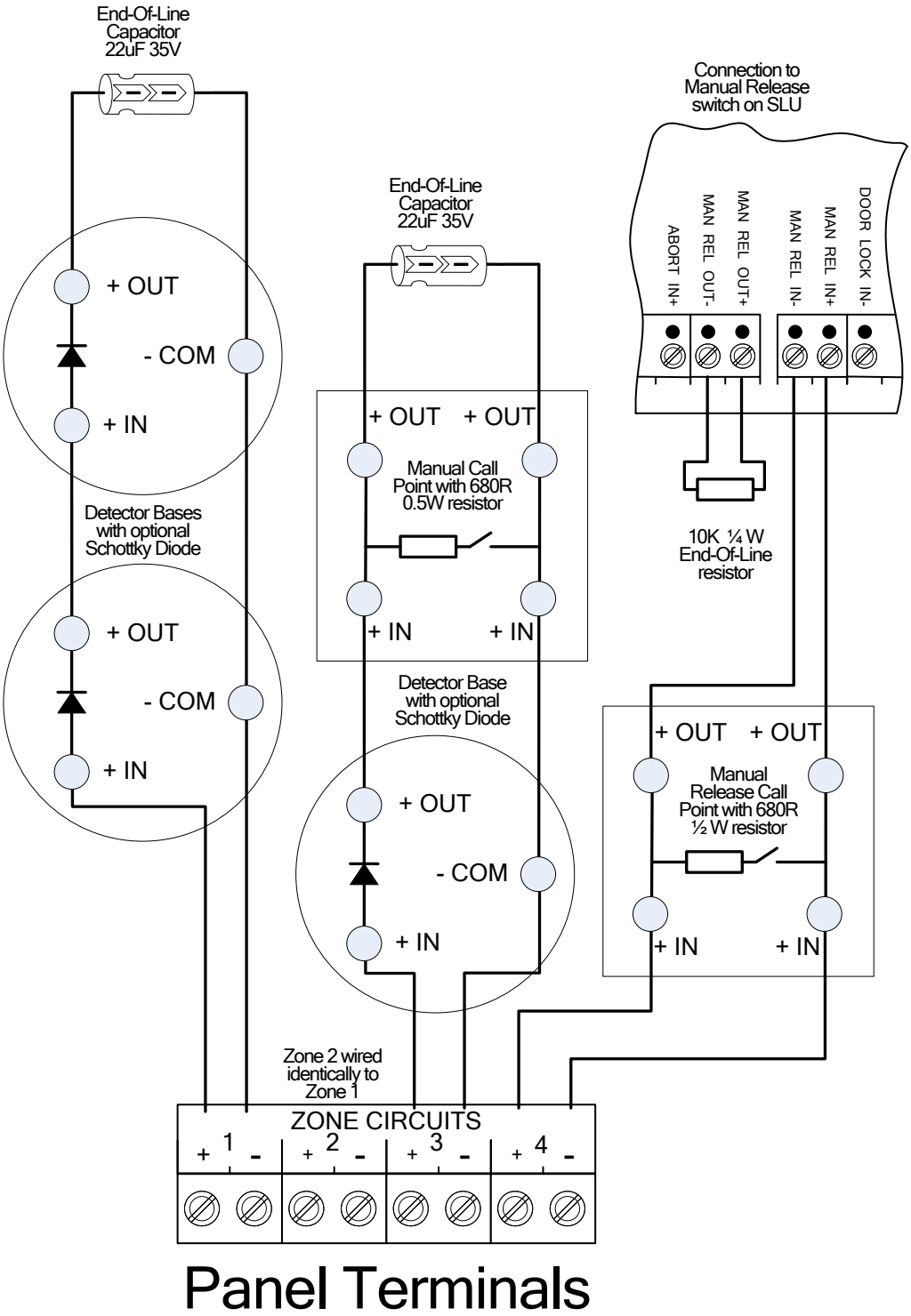

12.2. Sounders & Actuators Connection Diagram

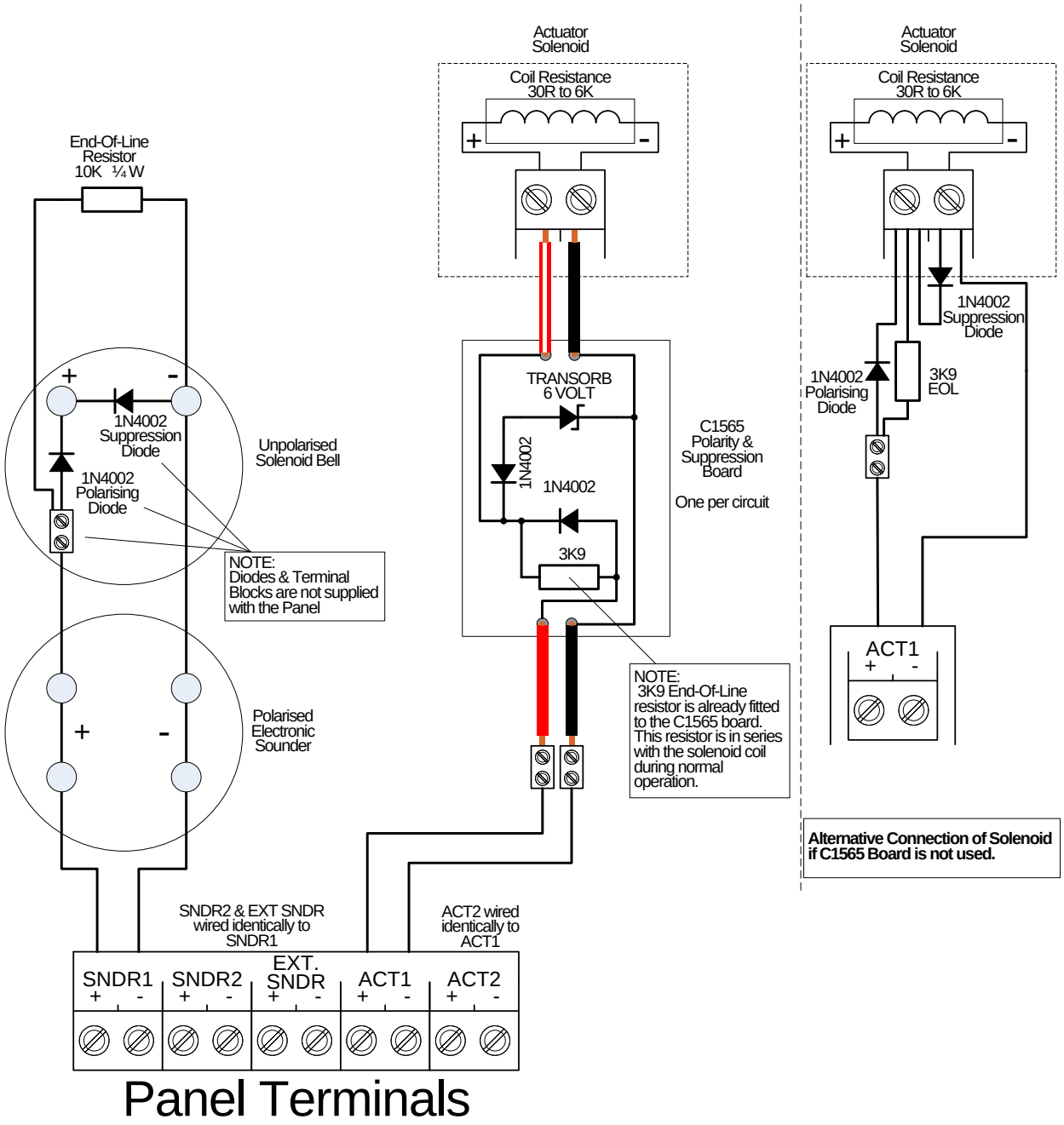

12.3. Monitored Inputs Connection Diagram

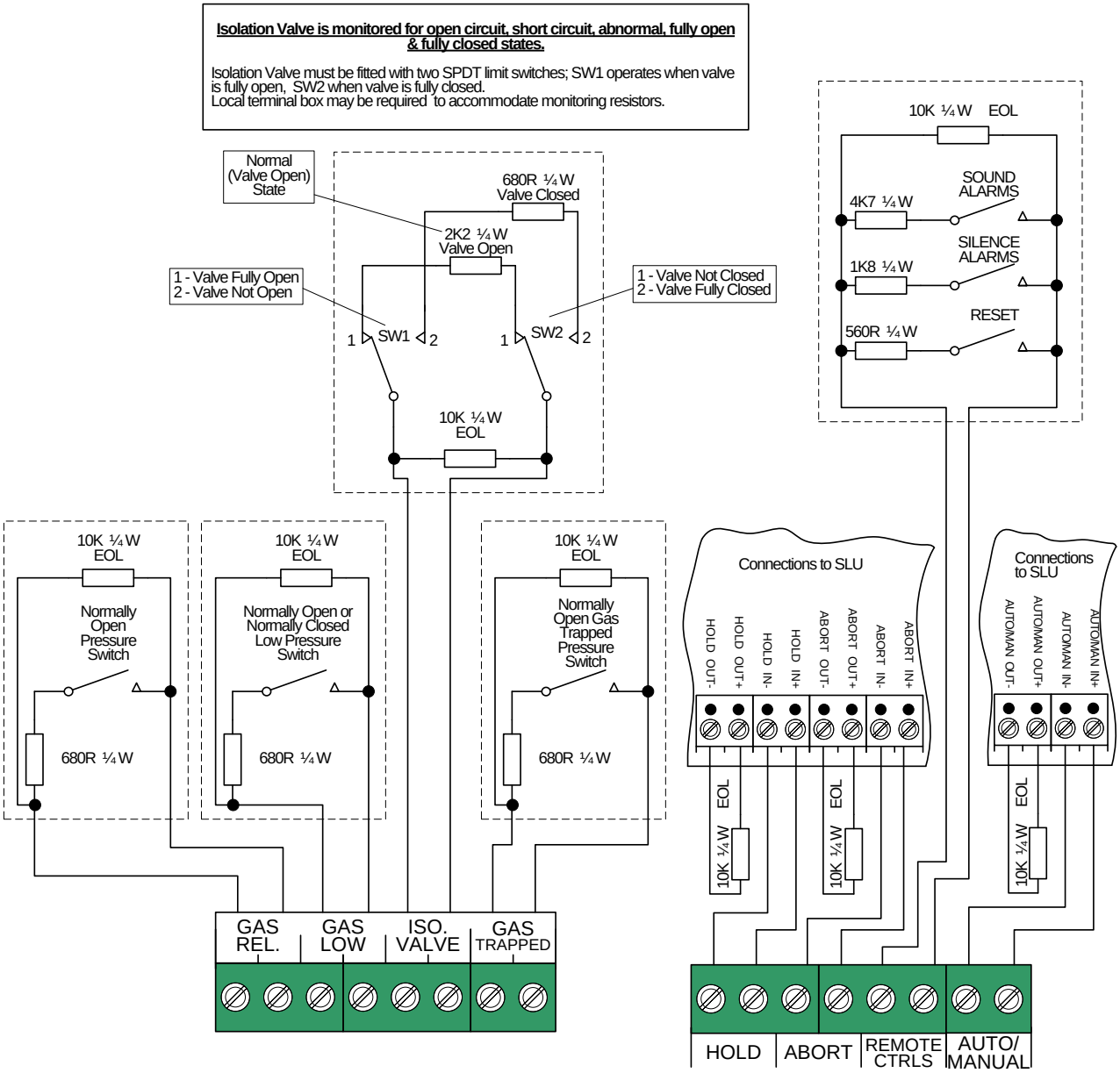

Panel Terminals

12.4. Monitored Outputs Connection Diagram

These Outputs are Reverse-polarity monitored at 5VDC.
They are Active at 28 VDC (Nominal)

Each Output can be configured independently for Volt-Free contacts by removing the relevant links on the motherboard. The volt-free contacts are rated at 1 Amp, 30 VDC maximum.
DO NOT SWITCH AC VOLTAGES THROUGH THESE CONTACTS.

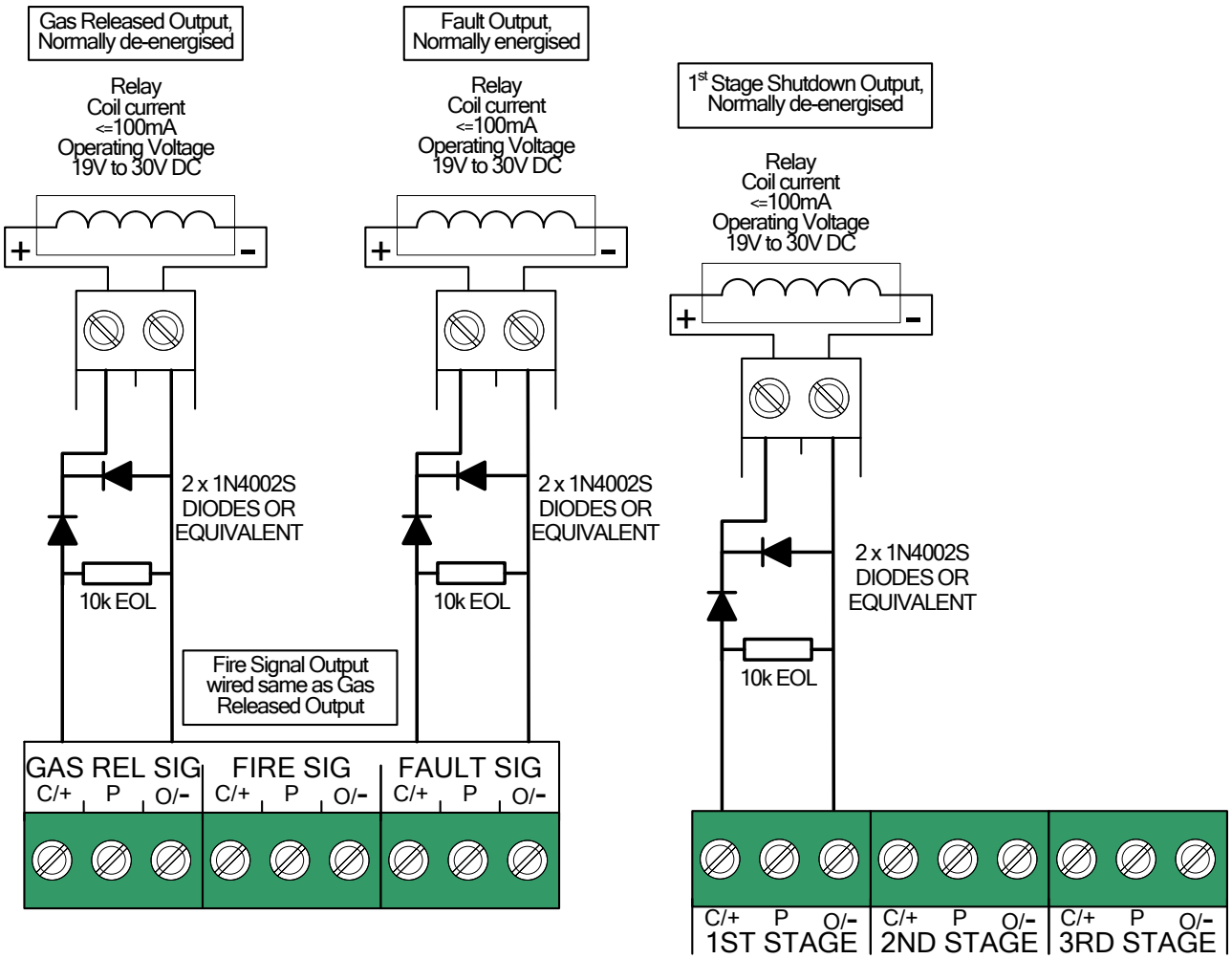

Panel Terminals

12.5. Remote Outputs & SLU Communication Connection Diagram

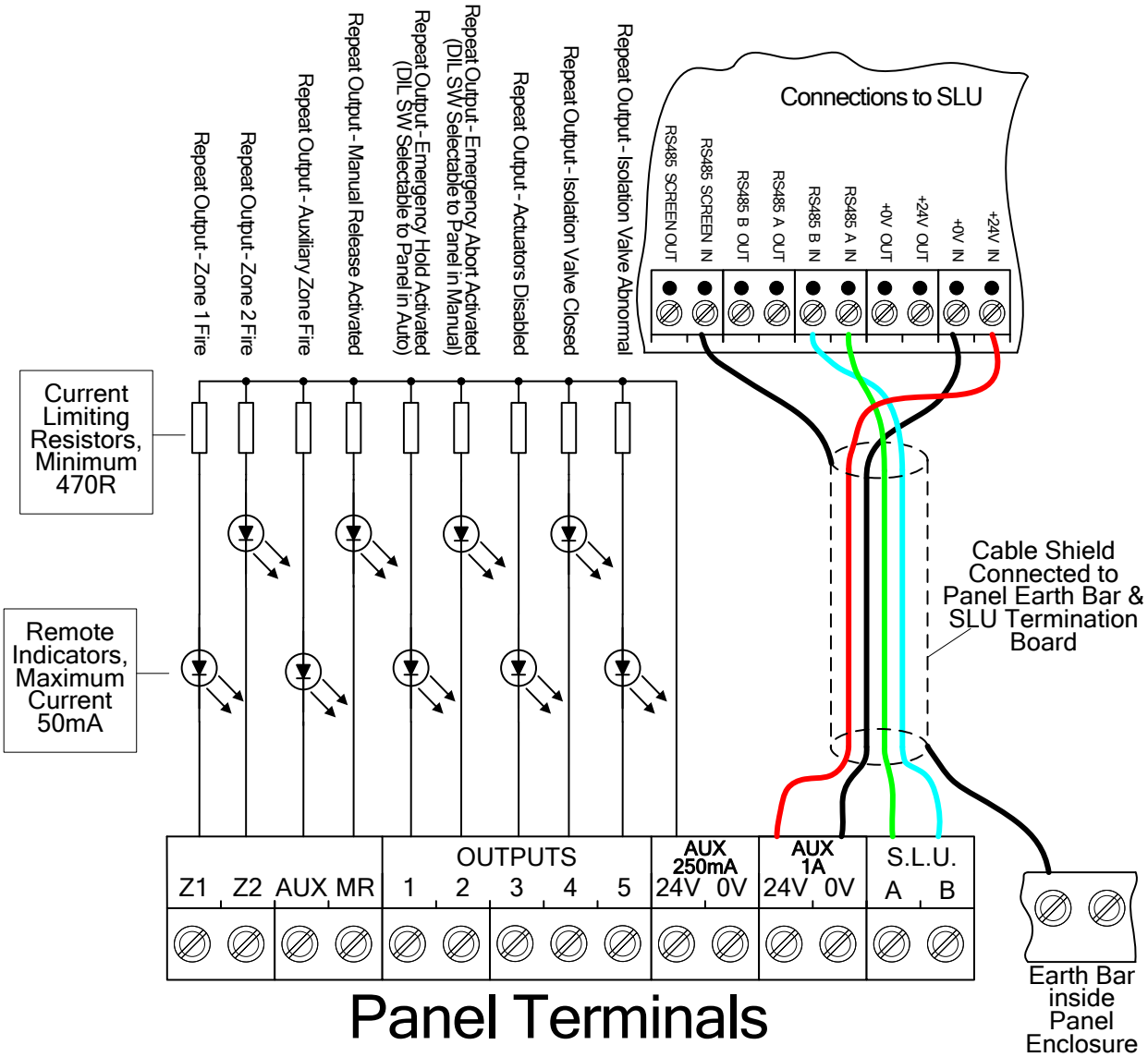

12.6. Glossary

1st Stage: (Pre-activated) Fire condition on zone 1 or zone 2 in system Automatic with panel configured to double knock mode.

2nd Stage: (Activated) Pre-discharge time delay running.

3rd Stage: (Activated) Pre discharge timer ended, actuators activated.

Discharged: (Released) Release of gas confirmed by signal from discharge pressure switch, or (when panel configured to “No discharge pressure switch” mode) actuator activated.

13. Mechanical, Electrical & Environmental Specification

Mechanical Specification	
Size [mm] (HxWxD):	370mm X 325mm X 125mm
Weight excluding batteries:	4.85Kg

Mains Input Specification	
Maximum Input current:	1.6A
Protection: **[Warning: Replace only with identical type & rating of BEAB or VDE approved fuse]**	**T5AH250V** **(20mm fuse, 5A, HBC, Anti-surge, approved to BS EN 60127 or equivalent.)**
Input Voltage:	230V AC +10%/-15%
Cable requirements:	Minimum of 1mm^2 copper protected by a 5A fuse.

Panel Integrated Power Supply Output Specification	
Maximum Short Term Current Output (I max b)	4.8A
Maximum Continuous Current (I max a)	1.3A
Minimum Output Current I(min)	0A
Voltage Output, Mains On	26.5 - 28.6V (27.15V nominal)
Maximum Current Output, Mains Failed	4.8A
Voltage Output, Mains Failed	28.3V-19V
Max Ripple including switching spikes [full load, battery disconnected]	0.7V
Output voltage adjustment	Factory set
Output protection:	Electronic current limiting
Common fault output:	Not available to user
Mains failed fault output:	Not available to user

Battery Specification	
Battery charger output: Temperature compensated float charger 28.25V ±0.1V@-5°C 26.78 V±0.1V@ +50 °C.	5A
Maximum internal resistance of battery & charger circuit (Ri max)	0.35 Ohms
Battery type: **POWERSONIC** **[Warning: Replace only with identical battery]**	2 off PS12120 (12V 12Ah)
Battery size (mm): 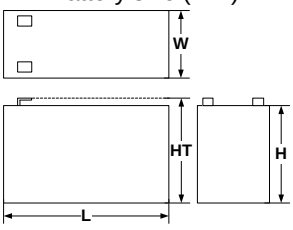	L = 151 W = 98 H = 94 HT = 100
Battery circuit protection: **[Warning: Replace only with identical type & rating of fuse]**	**F6.15AL250V 20mm fast blow glass fuse**
Mains failed fault battery current:	60mA + Ancillary equipment current
Mains failed alarm battery current:	160mA + 20mA to 50mA for each zone in alarm + Ancillary equipment current + Alarm circuit current + Solenoid circuit current

Environmental Specification	
Operating temperature:	-5ºC to 40ºC
Operating humidity:	5% to 95%

14. Construction Products Directive

0086

Control Equipment Ltd
Hillcrest Business Park
Cinder Bank
Dudley
West Midlands
DY2 9AP
United Kingdom.

08
0086-CPD-517159

EN54-2

Control and indicating equipment for fire detection and fire alarm systems for buildings
Provided options:

- Outputs to fire alarm devices.
- Output to fault warning routing equipment.
- Test condition.

EN54-4

Power supply equipment for fire detection and fire alarm systems for buildings

EN 12094-1

Electrical automatic control and delay device

Environmental class A
1 flooding zone
CO_2-high-pressure, CO_2-low-pressure, inert gas, Halocarbon
Provided options:

- Extinguishing system delay.
- Reception of a signal representing the flow of extinguishing agent.
- Monitoring of status of components:
  Low pressure/low weight.
- Reception of signal from an emergency hold device.
- Separate monitoring of the status of non-electrical disable device[s].
- Input from auto/manual selector switches.
- Transmission of a triggering signal to equipment within the fire extinguishing system:
  Optical warning devices.
- Transmission of signals to equipment outside the fire extinguishing system.
- Reception of signal from an emergency abort device.
- Activation of alarm devices with different signals.

Response delay activated condition – maximum 3s.
Response delay triggering of outputs – maximum 1s.